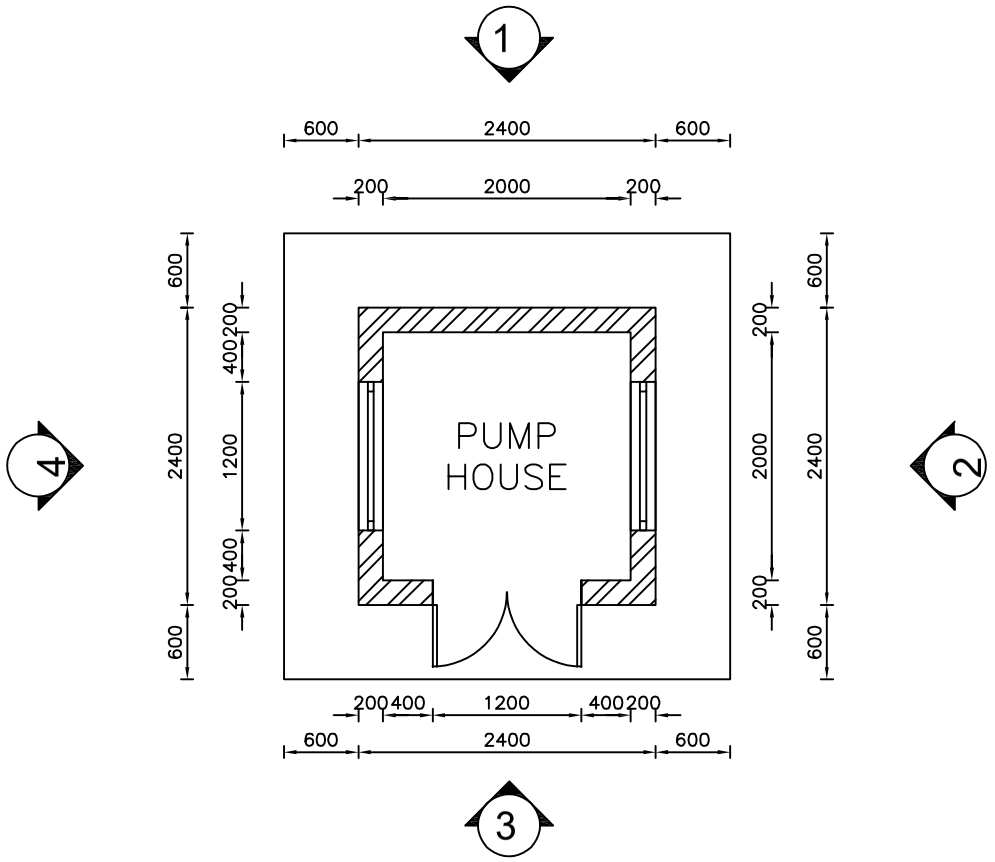

PLAN

SCALE 1:30

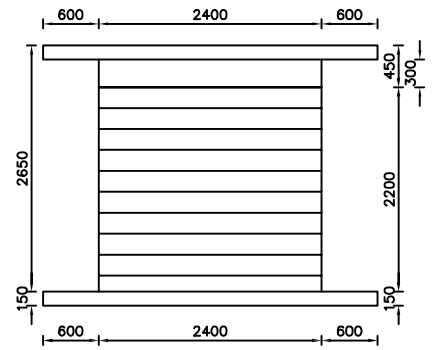

SIDE ELEVATION 1

SCALE 1:40

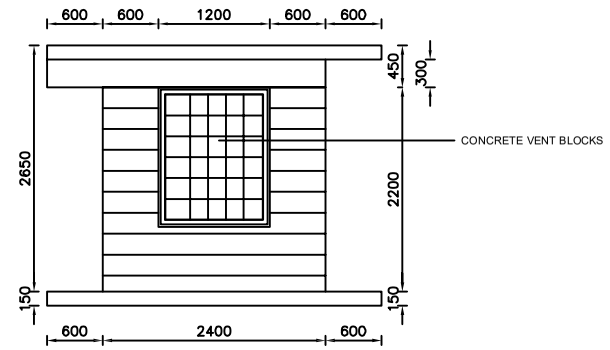

SIDE ELEVATION 2

SCALE 1:40

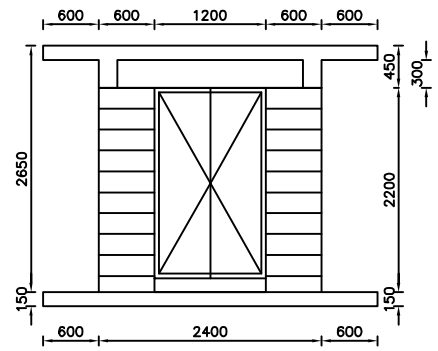

SIDE ELEVATION 3

SCALE 1:40

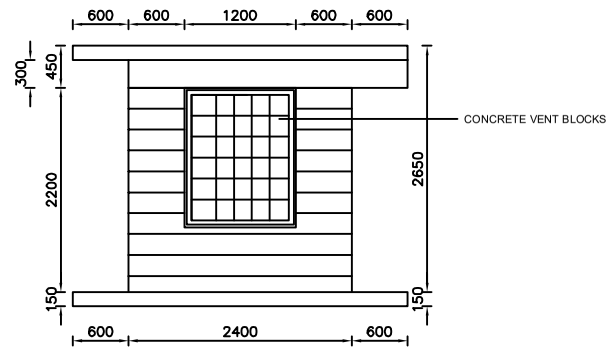

SIDE ELEVATION 4

SCALE 1:40

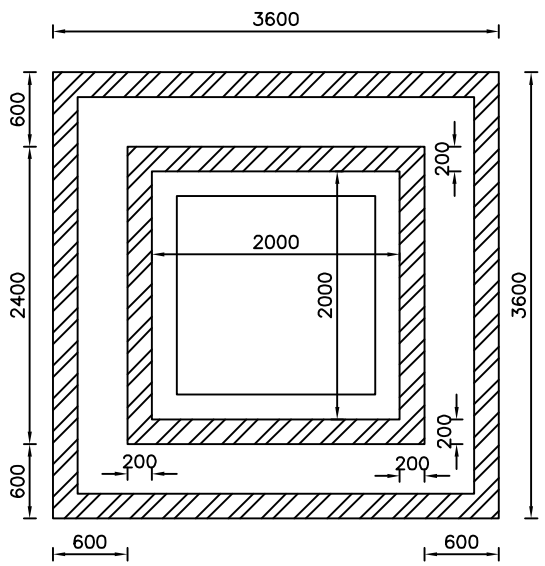

FOUNDATION PLAN

SCALE 1:30

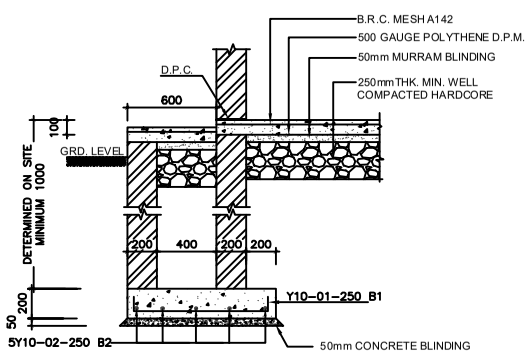

SECTION A-A

SCALE 1 : 25

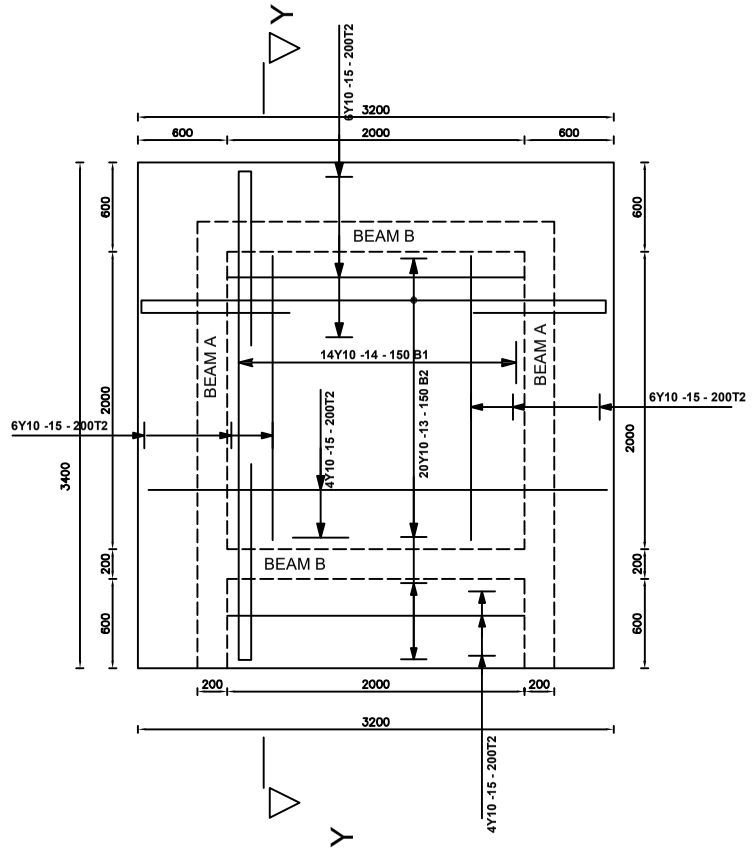

R. C. SLAB DETAILS

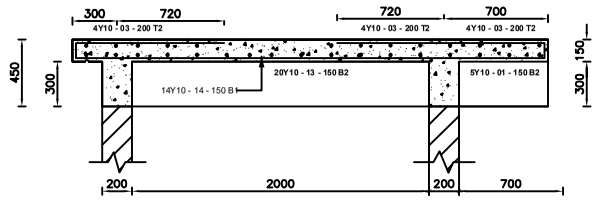

R. C. SLAB SECTION Y-Y

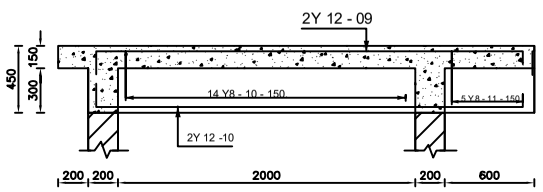

BEAM A 2No.

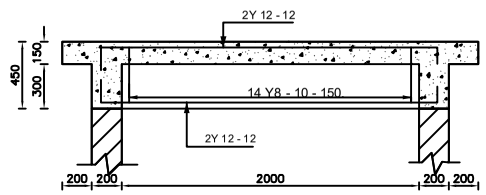

BEAM B 2No.

NOTES:
1. Structural concrete to be Class 20/25, 1:1.5:3 Mix.
2. Blinding concrete to be Class 10/15, 1:3:6 Mix.
3. Reinforcement: Y - Square twisted H.T. bars to BS 4461
4. Concrete cover to reinforcement: slabs - 15mm, beams - 25mm columns - 40mm, bases - 50mm

CLIENT:

TANA WATER WORKS DEVELOPMENT AGENCY
P.O BOX 1292 - 10100 NYERI

CONTRACTOR:

REVISIONS

No.	DATE	DETAILS

DRAWING TYPE:
TWWDA STANDARD DRAWING.

	NAME	DATE	SIGNATURE
DESIGN BY:	EWW		
DRAWN BY:			
CHECKED BY:	EWW		
APPROVED BY:			
SCALE 1:5		DRAWING No. 01	