REPUBLIC OF KENYA

AFRICAN DEVELOPMENT BANK
AFRICAN DEVELOPMENT FUND

TANA WATER WORKS DEVELOPMENT AGENCY

KENYA TOWNS SUSTAINABLE WATER SUPPLY AND SANITATION PROGRAM

TENDER No. TWWDA/ADB/004/2024-2025

Construction of Chuka and Chogoria Water Supply and Sanitation Infrastructure

ADDITIONAL WORKS FOR CHUKA AND CHOGORIA WATER SUPPLY INFRASTRUCTURE

CONTRACT DOCUMENT
VOLUME III

CONTENTS

ENGINEERING DRAWINGS

Employer:

TANA WATER WORKS DEVELOPMENT AGENCY
P.O. BOX 1292 – 10100
NYERI, KENYA

Project Manager:

CHIEF EXECUTIVE OFFICER
TANA WATER WORKS DEVELOPMENT AGENCY
P.O. BOX 1292 – 10100
NYERI, KENYA

Supervising Engineers:

MANGAT I.B. PATEL (MIBP) LIMITED
CONSULTING ENGINEERS
P.O. BOX 48674, 00100 – GPO
NAIROBI, KENYA
TEL.: +254-20-2710500 / 1
Email: mibp.nairobi@mibp.co.ke

JUNE 2025

KENYA TOWNS SUSTAINABLE WATER SUPPLY AND SANITATION PROGRAM

DESIGN REVIEW AND CONSTRUCTION SUPERVISION OF CHUKA AND CHOGORIA WATER SUPPLY AND SEWERAGE PROJECT

TENDER NO. TWWDA/ADB/004/2024-2025

SCHEDULE OF ENGINEERING DRAWINGS - ADDITIONAL WORKS FOR CHUKA AND CHOGORIA WATER SUPPLY INFRASTRUCTURE

DRG NO.	DESCRIPTION		DRG NO.	DESCRIPTION
	GENERAL (G)		M407/CK/TWKT/24	PLAN AND LONGITUDINAL SECTION SHEET 24 OF 26
M407/CK/G/01	PROJECT LOCATION PLAN - EXISTING AND PROPOSED CHUKA WATER SUPPLY SYSTEM		M407/CK/TWKT/25	PLAN AND LONGITUDINAL SECTION SHEET 25 OF 26
M407/CG/G/01	PROJECT LOCATION PLAN - EXISTING AND PROPOSED CHOGORIA WATER SUPPLY SYSTEM		M407/CK/TWKT/26	PIPE FITTINGS SHEET 26 OF 26
	TREATED WATER GRAVITY MAINS (TW)			**BREAK PRESSURE TANKS (BPT)**
	KABUI TANK LINE EXTENSION (TWKB)			**BPT - 01**
M407/CG/TWKB/01	PLAN AND LONGITUDINAL SECTION SHEET 1 OF 3		M407/CK/BPT-1/01	BPT - 01, $5m^3$ - SITE LAYOUT PLAN
M407/CG/TWKB/02	PLAN AND LONGITUDINAL SECTION SHEET 2 OF 3		M407/CK/BPT-1/02	BPT - 01, $5m^3$ - PLAN, SECTION & R.C. DETAILS
M407/CG/TWKB/03	PLAN AND LONGITUDINAL SECTION SHEET 3 OF 3		M407/CK/BPT-1/03	BPT - 01, $5m^3$ - PIPEWORK DETAILS
	KAANWA LINE EXTENSION - NTUNTUNI LINE (TWKN)			**BPT - 02**
M407/CK/TWKN/01	PLAN AND LONGITUDINAL SECTION SHEET 1 OF 7		M407/CK/BPT-2/01	BPT - 02, $5m^3$ - SITE LAYOUT PLAN
M407/CK/TWKN/02	PLAN AND LONGITUDINAL SECTION SHEET 2 OF 7		M407/CK/BPT-2/02	BPT - 02, $5m^3$ - PLAN, SECTION & R.C. DETAILS
M407/CK/TWKN/03	PLAN AND LONGITUDINAL SECTION SHEET 3 OF 7		M407/CK/BPT-2/03	BPT - 02, $5m^3$ - PIPEWORK DETAILS
M407/CK/TWKN/04	PLAN AND LONGITUDINAL SECTION SHEET 4 OF 7			
M407/CK/TWKN/05	PLAN AND LONGITUDINAL SECTION SHEET 5 OF 7			
M407/CK/TWKN/06	PLAN AND LONGITUDINAL SECTION SHEET 6 OF 7			**BPT - 03**
M407/CK/TWKN/07	PIPE FITTINGS SHEET 7 OF 7		M407/CK/BPT-3/01	BPT - 03, $5m^3$ - SITE LAYOUT PLAN
			M407/CK/BPT-3/02	BPT - 03, $5m^3$ - PLAN, SECTION & R.C. DETAILS
			M407/CK/BPT-3/03	BPT - 03, $5m^3$ - PIPEWORK DETAILS
	KAANWA LINE EXTENSION - MWANJATI LINE (TWKM)			
M407/CK/TWKW/01	PLAN AND LONGITUDINAL SECTION SHEET 1 OF 7			
M407/CK/TWKW/02	PLAN AND LONGITUDINAL SECTION SHEET 2 OF 7			**BPT - 04**
M407/CK/TWKW/03	PLAN AND LONGITUDINAL SECTION SHEET 3 OF 7		M407/CK/BPT-4/01	BPT - 04, $5m^3$ - SITE LAYOUT PLAN
M407/CK/TWKW/04	PLAN AND LONGITUDINAL SECTION SHEET 4 OF 7		M407/CK/BPT-4/02	BPT - 04, $5m^3$ - PLAN, SECTION & R.C. DETAILS
M407/CK/TWKW/05	PLAN AND LONGITUDINAL SECTION SHEET 5 OF 7		M407/CK/BPT-4/03	BPT - 04, $5m^3$ - PIPEWORK DETAILS
M407/CK/TWKW/06	PLAN AND LONGITUDINAL SECTION SHEET 6 OF 7			
M407/CK/TWKW/07	PIPE FITTINGS SHEET 7 OF 7			
				STANDARD DRAWINGS (SD)
			M407/SD/01	DETAILS FOR VALVE CHAMBER
	KATHWANA LINE (TWKT)		M407/SD/02	DETAILS OF PRECAST CONCRETE COVERS FOR VALVE CHAMBERS
M407/CK/TWKT/01	PLAN AND LONGITUDINAL SECTION SHEET 1 OF 26		M407/SD/03	THRUST BLOCKS, ANCHOR BLOCKS AND INDICATOR POST DETAILS
M407/CK/TWKT/02	PLAN AND LONGITUDINAL SECTION SHEET 2 OF 26		M407/SD/04	TYPICAL DETAILS OF CONSUMER WATER METER INSTALLATION ON A SERVICE LINE
M407/CK/TWKT/03	PLAN AND LONGITUDINAL SECTION SHEET 3 OF 26			
M407/CK/TWKT/04	PLAN AND LONGITUDINAL SECTION SHEET 4 OF 26			
M407/CK/TWKT/05	PLAN AND LONGITUDINAL SECTION SHEET 5 OF 26			
M407/CK/TWKT/06	PLAN AND LONGITUDINAL SECTION SHEET 6 OF 26			
M407/CK/TWKT/07	PLAN AND LONGITUDINAL SECTION SHEET 7 OF 26			
M407/CK/TWKT/08	PLAN AND LONGITUDINAL SECTION SHEET 8 OF 26			
M407/CK/TWKT/09	PLAN AND LONGITUDINAL SECTION SHEET 9 OF 26			
M407/CK/TWKT/10	PLAN AND LONGITUDINAL SECTION SHEET 10 OF 26			
M407/CK/TWKT/11	PLAN AND LONGITUDINAL SECTION SHEET 11 OF 26			
M407/CK/TWKT/12	PLAN AND LONGITUDINAL SECTION SHEET 12 OF 26			
M407/CK/TWKT/13	PLAN AND LONGITUDINAL SECTION SHEET 13 OF 26			
M407/CK/TWKT/14	PLAN AND LONGITUDINAL SECTION SHEET 14 OF 26			
M407/CK/TWKT/15	PLAN AND LONGITUDINAL SECTION SHEET 15 OF 26			
M407/CK/TWKT/16	PLAN AND LONGITUDINAL SECTION SHEET 16 OF 26			
M407/CK/TWKT/17	PLAN AND LONGITUDINAL SECTION SHEET 17 OF 26			
M407/CK/TWKT/18	PLAN AND LONGITUDINAL SECTION SHEET 18 OF 26			
M407/CK/TWKT/19	PLAN AND LONGITUDINAL SECTION SHEET 19 OF 26			
M407/CK/TWKT/20	PLAN AND LONGITUDINAL SECTION SHEET 20 OF 26			
M407/CK/TWKT/21	PLAN AND LONGITUDINAL SECTION SHEET 21 OF 26			
M407/CK/TWKT/22	PLAN AND LONGITUDINAL SECTION SHEET 22 OF 26			
M407/CK/TWKT/23	PLAN AND LONGITUDINAL SECTION SHEET 23 OF 26			

LOT 1 - CHUKA WATER SUPPLY INFRASTRUCTURE

CONTRACT No. TWSB/ADB/003/2019-2020

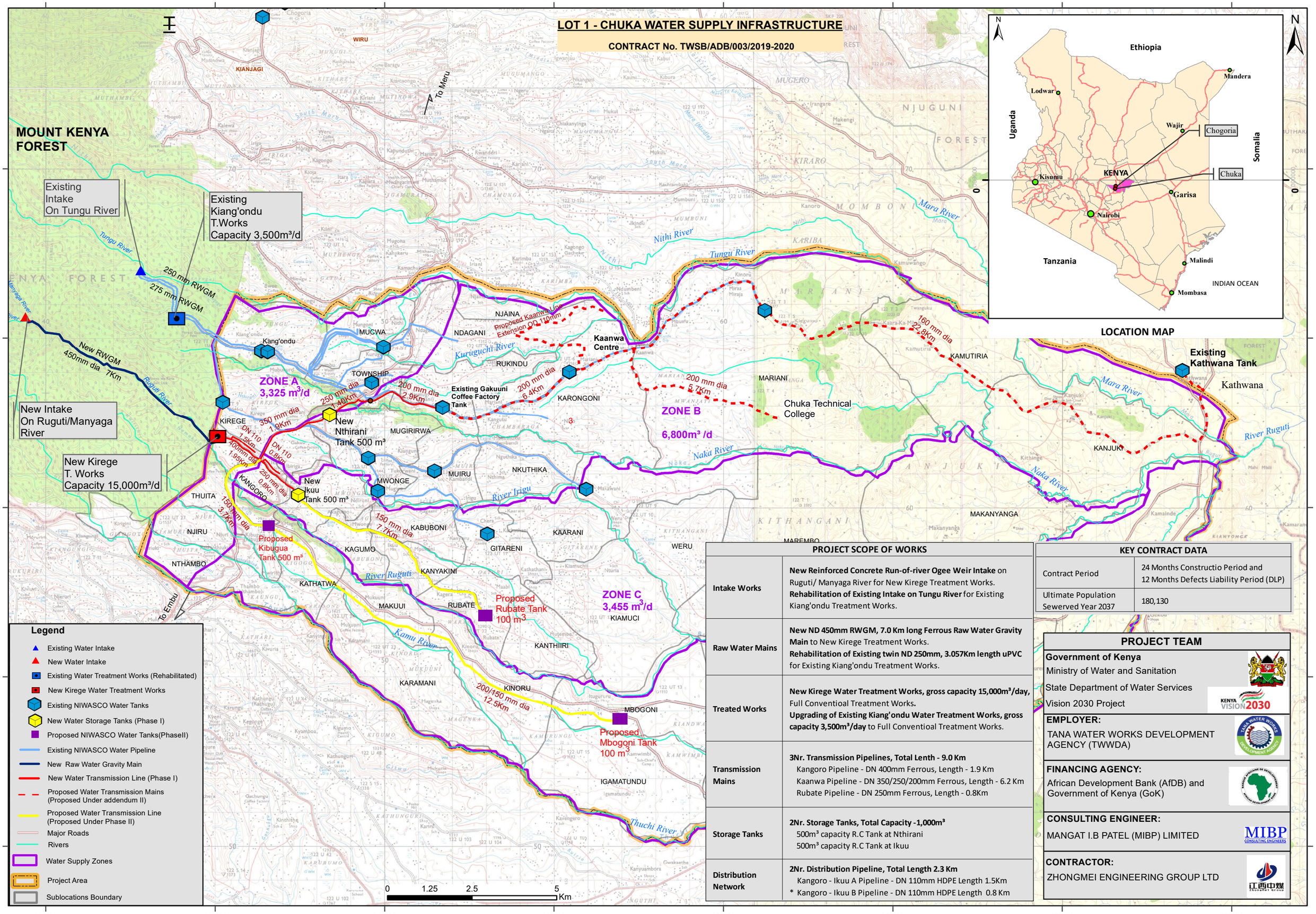

PROJECT SCOPE OF WORKS	
Intake Works	**New Reinforced Concrete Run-of-river Ogee Weir Intake** on Ruguti/ Manyaga River for New Kirege Treatment Works. **Rehabilitation of Existing Intake on Tungu River** for Existing Kiang'ondu Treatment Works.
Raw Water Mains	**New ND 450mm RWGM, 7.0 Km long Ferrous Raw Water Gravity Main** to New Kirege Treatment Works. **Rehabilitation of Existing twin ND 250mm, 3.057Km length uPVC** for Existing Kiang'ondu Treatment Works.
Treated Works	**New Kirege Water Treatment Works, gross capacity 15,000m³/day,** Full Conventioal Treatment Works. **Upgrading of Existing Kiang'ondu Water Treatment Works, gross capacity 3,500m³/day** to Full Conventioal Treatment Works.
Transmission Mains	**3Nr. Transmission Pipelines, Total Lenth - 9.0 Km** Kangoro Pipeline - DN 400mm Ferrous, Length - 1.9 Km Kaanwa Pipeline - DN 350/250/200mm Ferrous, Length - 6.2 Km Rubate Pipeline - DN 250mm Ferrous, Length - 0.8Km
Storage Tanks	**2Nr. Storage Tanks, Total Capacity -1,000m³** 500m³ capacity R.C Tank at Nthirani 500m³ capacity R.C Tank at Ikuu
Distribution Network	**2Nr. Distribution Pipeline, Total Length 2.3 Km** Kangoro - Ikuu A Pipeline - DN 110mm HDPE Length 1.5Km * Kangoro - Ikuu B Pipeline - DN 110mm HDPE Length 0.8 Km

KEY CONTRACT DATA	
Contract Period	24 Months Constructio Period and 12 Months Defects Liability Period (DLP)
Ultimate Population Sewerved Year 2037	180,130

PROJECT TEAM

Government of Kenya
Ministry of Water and Sanitation
State Department of Water Services
Vision 2030 Project

EMPLOYER:
TANA WATER WORKS DEVELOPMENT AGENCY (TWWDA)

FINANCING AGENCY:
African Development Bank (AfDB) and Government of Kenya (GoK)

CONSULTING ENGINEER:
MANGAT I.B PATEL (MIBP) LIMITED

CONTRACTOR:
ZHONGMEI ENGINEERING GROUP LTD

LOT 2 - CHOGORIA WATER SUPPLY INFRASTRUCTURE

CONTRACT No. TWSB/ADB/004/2017-2018

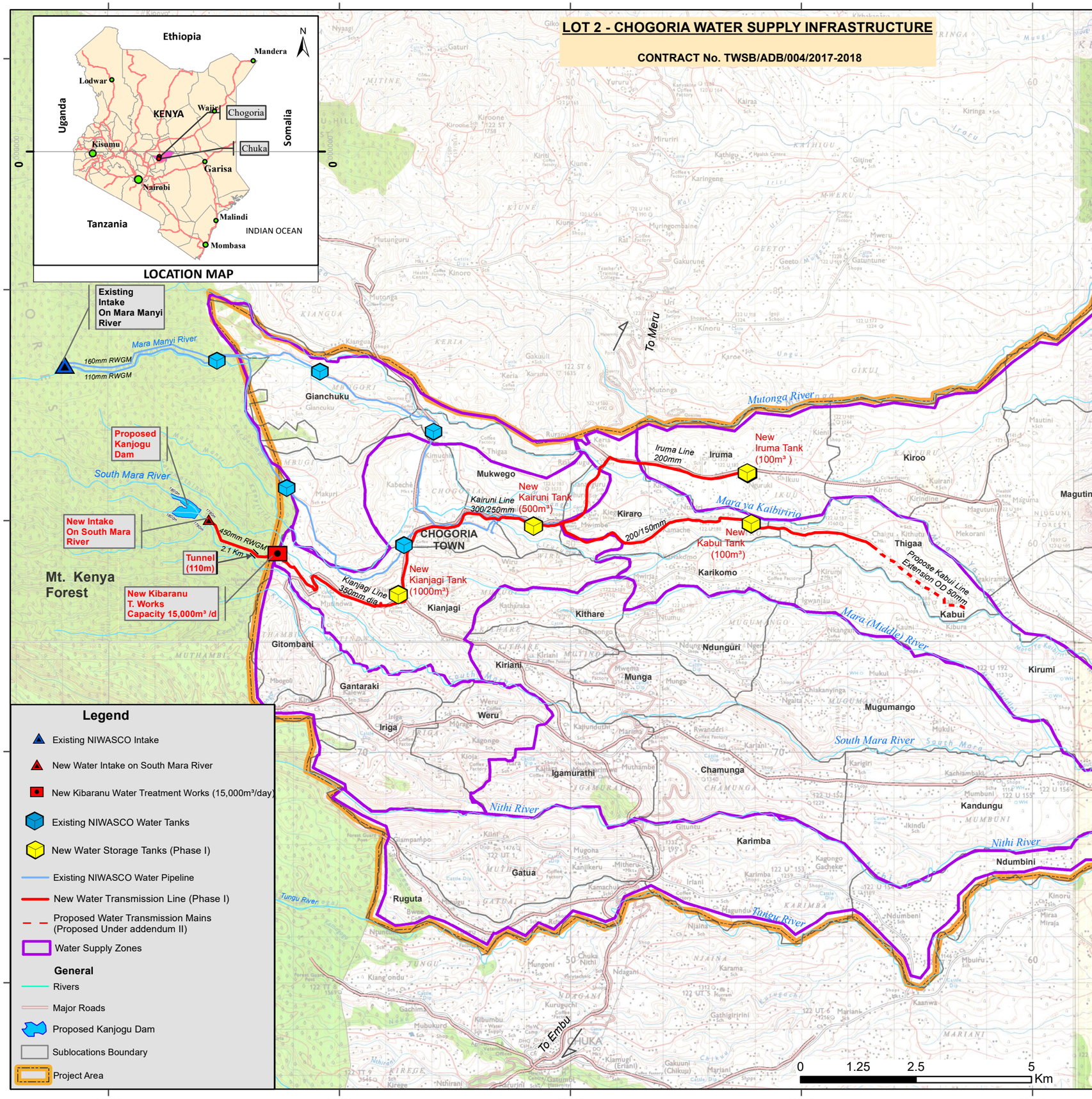

Legend

- Existing NIWASCO Intake
- New Water Intake on South Mara River
- New Kibaranu Water Treatment Works (15,000m³/day)
- Existing NIWASCO Water Tanks
- New Water Storage Tanks (Phase I)
- Existing NIWASCO Water Pipeline
- New Water Transmission Line (Phase I)
- Proposed Water Transmission Mains (Proposed Under addendum II)
- Water Supply Zones

General

- Rivers
- Major Roads
- Proposed Kanjogu Dam
- Sublocations Boundary
- Project Area

PROJECT SCOPE OF WORKS

Intake Works	**New Reinforced Concrete Run-of-river Ogee Weir Intake** on South Mara River for New Kibaranu Treatment Works. **Rehabilitation of Existing Intake on Mara Manyi River** for Existing High-Level Water Supply Area.
Raw Water Mains	**New ND 450mm, 2.1 Km long Steel Raw Water Gravity Main** to New Kibaranu Treatment Works. **Rehabilitation of Existing ND 160mm, 3Km length uPVC mains** for Existing High-Level Water Supply Area.
Treated Works	**New Kibaranu Water Treatment Works, gross capacity 15,000m³/day,** Full Conventional Treatment Works**.**
Transmission Mains	**4Nr. Transmission Pipelines, Total Length - 22.1Km** Kianjagi Pipeline - DN 350mm Steel, Length - 3.2Km Kairuni Pipeline - DN 250mm/300mm Steel, Length - 5.6Km Iruma Pipeline - DN 200mm Steel, Length - 5.3Km, Kabui Pipeline - DN 200/160mm HDPE, Length 7.45 Km
Storage Tanks	**4Nr. Storage Tanks, Total Capacity -1,700m³** 1,000m³ capacity R.C Tank at Kianjagi 500m³ capacity R.C Tank at Kairuni 100m³ capacity R.C Tank at Iruma * 100m³ capacity R.C Tank at Kabui
Distribution Network	**Rehabilitation Works on Existing Water Supply System** i.e Repairs of Distribution Pipeline and Storage Tanks**.**

KEY CONTRACT DATA

Contract Price	**Kshs 574,317,060.56** (Exclusive of VAT)
Date of Contract Signing	20th November2018
Date of Site Handling Over to Contractor	14th December 2018
Commencement Date	2nd January 2019
Contract Period	24 Months Construction Period and 12 Months Defects Liability Period (DLP)
Initial Completion Date	3rd January 2021
Revised Completion Date	3rd March 2023
Ultimate Population Served Year 2037	160,000

PROJECT TEAM

Government of Kenya
Ministry of Water, Sanitation and Irrigation
State Department of Water Services
Vision 2030 Project

EMPLOYER:
TANA WATER WORKS DEVELOPMENT AGENCY (TWWDA)

FINANCING AGENCY:
African Development Bank (AfDB) and Government of Kenya (GoK)

CONSULTING ENGINEER:
MANGAT I.B PATEL (MIBP) LIMITED

CONTRACTOR:
ORIENTAL CONSTRUCTION COMPANY (OCC)

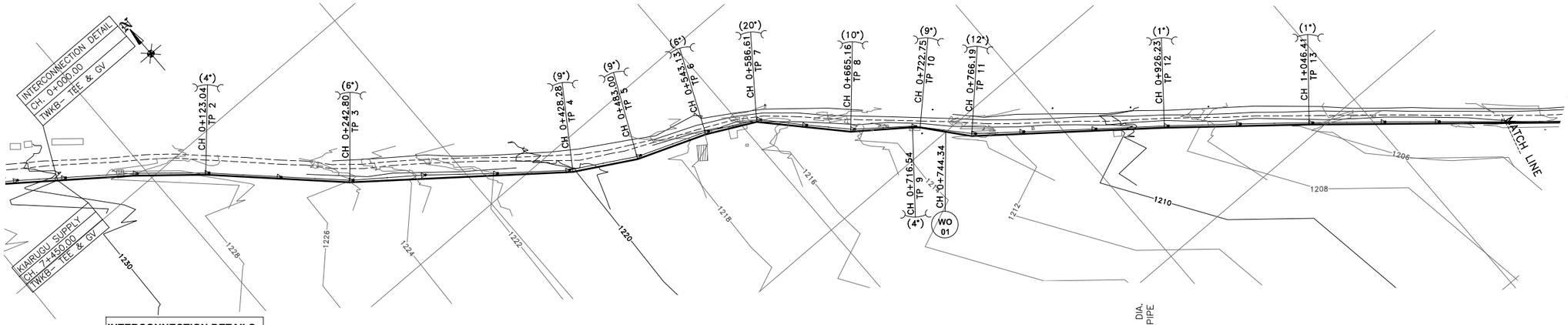

DETAIL | **INTERCONNECTION DETAILS**
CH- 0+000.0
TW-KBE-TEE & G.V

PLAN

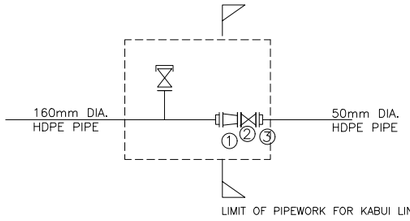

DESCRIPTION
1 No. REQUIRED

1. 1 No. 160X50mm DIA. ALL FLANGED CONCENTRIC TAPER
2. 1 No. 50mm DIA. ALL FLANGED GATE VALVE
3. 1 No. 50mm DIA. PE FLANGE ADAPTER (STUB END) COMPLETE WITH METAL BACK UP RING

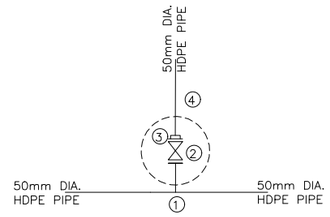

DETAIL | **CH. 0+744.34**
LINE TW-KBE-TEE& GV(WO) - 01

DESCRIPTION
1 No. REQUIRED

1. 1 Nos. 50x50mm DIA. HDPE PLAIN LEVEL INVERT TEE WITH FLANGED BRANCH
2. 1 No. 50mm DIA. ALL FLANGED GATE VALVE
3. 1 No. 50mm DIA. PE FLANGE ADAPTER (STUB END) COMPLETE WITH METAL BACK UP RING
4. 1 No. 50mm DIA. HDPE PIPE (LENGTH TO SUIT ON SITE)

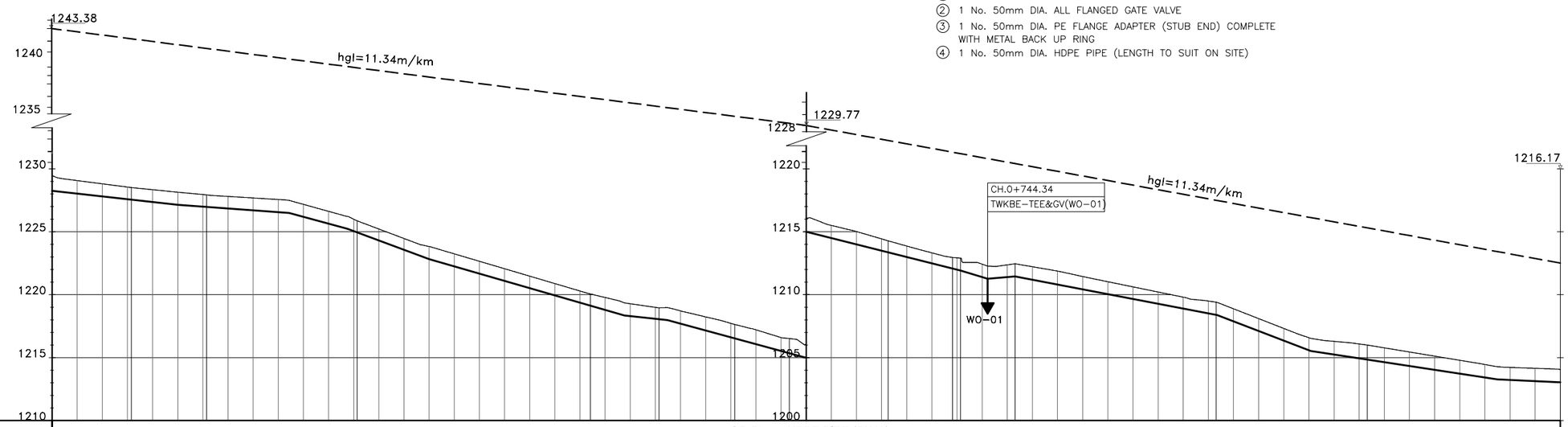

TYPE OF PIPE AND SIZE	OD 50mm HDPE PIPE (PN10)
GEOLOGICAL CONDITION	RED LOAM SOIL

CHAINAGE (m)	EXISTING GROUND LEVEL (m)	INVERT LEVELS (m)	DEPTH OF INVERT (m)
0+000.00	1228.46	1228.26	1.20
0+020.00	1229.07	1228.04	1.03
0+040.00	1228.81	1227.81	1.00
0+060.00	1228.55	1227.59	0.96
0+060.97	1228.51	1227.56	0.96
0+080.00	1228.34	1227.37	0.98
0+100.00	1228.14	1227.14	1.00
0+120.00	1227.95	1226.99	0.96
0+120.82	1227.95	1226.99	0.96
0+140.00	1227.81	1226.85	0.96
0+160.00	1227.68	1226.70	0.98
0+180.00	1227.56	1226.56	1.01
0+188.61	1227.49	1226.49	1.00
0+200.00	1227.18	1226.19	0.99
0+220.00	1226.62	1225.65	0.98
0+235.08	1226.24	1225.24	1.00
0+242.80	1225.88	1224.88	1.00
0+242.80	1225.88	1224.93	0.95
0+260.00	1225.22	1224.31	0.90
0+280.00	1224.47	1223.57	0.89
0+300.00	1223.83	1222.83	1.00
0+320.00	1223.24	1222.25	0.99
0+340.00	1222.65	1221.67	0.98
0+360.00	1222.06	1221.10	0.97
0+380.00	1221.47	1220.52	0.95
0+400.00	1220.88	1219.94	0.94
0+420.00	1220.29	1219.37	0.93
0+428.28	1220.06	1219.13	0.93
0+440.00	1219.78	1218.79	0.99
0+455.38	1219.35	1218.35	1.00
0+460.00	1219.28	1218.30	0.98
0+480.00	1218.88	1218.08	0.80
0+489.62	1218.68	1217.68	1.00
0+500.00	1218.71	1217.70	1.02
0+520.00	1218.24	1217.16	1.08
0+540.03	1217.83	1216.83	1.00
0+560.00	1217.21	1216.08	1.14
0+580.00	1216.59	1215.53	1.06
0+586.61	1216.52	1215.36	1.16
0+600.00	1216.04	1214.96	1.08
0+620.00	1215.50	1214.50	1.01
0+640.00	1215.01	1213.99	1.02
0+660.00	1214.43	1213.49	0.94
0+665.16	1214.28	1213.36	0.92
0+680.00	1213.87	1212.99	0.88
0+700.00	1213.32	1212.49	0.84
0+716.54	1212.96	1212.07	0.88
0+720.00	1212.87	1211.99	0.88
0+740.00	1212.37	1211.40	0.97
0+744.34	1212.27	1211.27	1.00
0+760.00	1212.37	1211.41	0.96
0+766.19	1212.46	1211.46	1.00
0+780.00	1212.22	1211.19	1.03
0+800.00	1211.88	1210.81	1.07
0+820.00	1211.45	1210.43	1.01
0+840.00	1211.03	1210.05	0.98
0+860.00	1210.62	1209.67	0.96
0+880.00	1210.21	1209.28	0.93
0+900.00	1209.80	1208.90	0.90
0+920.00	1209.50	1208.52	0.98
0+926.23	1209.40	1208.40	1.00
0+940.00	1208.88	1207.89	0.99
0+960.00	1208.10	1207.12	0.98
0+980.00	1207.32	1206.35	0.97
1+000.00	1206.58	1205.58	1.00
1+020.00	1206.29	1205.25	1.05
1+040.00	1206.09	1204.94	1.14
1+046.41	1206.00	1204.85	1.15
1+060.00	1205.78	1204.64	1.14
1+080.00	1205.45	1204.34	1.11
1+100.00	1205.12	1204.03	1.08
1+120.00	1204.79	1203.73	1.06
1+140.00	1204.46	1203.43	1.03
1+149.87	1204.28	1203.28	1.00
1+160.00	1204.22	1203.23	0.99
1+180.00	1204.15	1203.13	1.02
1+200.00	1204.07	1203.03	1.04

GRADIENT: 1:89.61 | 1:135.20 | 1:37.04 | 1:26.93 | 1:34.99 | 1:92.70 | 1:36.97 | 1:39.87 | 1:33.45 | 1:118.58 | 1:52.36 | 1:26.06 | 1:55.97

REFERENCE PEG NO.: TP 1, TP 2, TP 3, TP 4, TP 5, TP 6, TP 7, TP 8, TP 9, TP 10, TP 11, TP 12, TP 13

LONGITUDINAL SECTION

0 100 200m

NOTES:

1. CONTOUR LEVELS ARE IN METERS AT TWO METER INTERVALS
2. GRID VALUES ARE IN METERS AT 200 METER INTERVALS
3. GEOLOGICAL CONDITIONS INDICATED ON DRAWING ARE FOR GENERAL GUIDANCE ONLY
4. DRAWING TO BE READ IN CONJUNCTION WITH STANDARD DRAWINGS

LEGEND:

- ROAD (TARMAC)
- ROAD / TRACK (EARTH / MURRAM)
- FENCE / HEDGE
- 1480 CONTOURS
- ELECTRIC POST
- CULVERT
- GATE
- TEMPORARY STRUCTURES
- BUILDINGS
- KeNHA / KeRRA ROAD BEACON
- PROPOSED TREATED WATER GRAVITY MAIN
- TRUNK SEWER TS 1
- TP10 TRAVERSE POINT & No.
- TRIAL HOLE
- 30° HORIZONTAL BEND (H) OR VERTICAL BEND (V) WITH ANGLE INDICATED
- RIVER/STREAM
- V.J. VIKING JOHNSON
- GV GATE VALVE
- SV-01 SECTIONAL VALVE & No.
- WO-01 WASHOUT VALVE & No.
- SAV-01 AIR VALVE & No.
- WM WATER METER
- PROPOSED MASONRY CHAMBER
- PROPOSED VALVE BOX
- n PIPELINE GRADIENT WITH SLOPE DIRECTION (SLOPE MIN. OR 1 IN n)

ISSUED FOR CONSTRUCTION

REVISIONS		SIGN	DATE	APPROVED
	BY			
	CHECKED			
	BY			
	CHECKED			
	BY			
	CHECKED			
	BY			
	CHECKED			

CLIENT:
THE CHIEF EXECUTIVE OFFICER
TANA WATER WORKS DEVELOPMENT AGENCY
P.O BOX 1292 - 10100,
NYERI, KENYA

CONSULTING ENGINEERS:
MANGAT I.B PATEL(MIBP) LIMITED
MIBP CONSULTING ENGINEERS
P.O BOX 48674,00100-GPO,
NAIROBI, KENYA
E-MAIL: mibp.nairobi@mibp.co.ke
TEL: +254-2-2710500

PROJECT TITLE:
KENYA TOWNS SUSTAINABLE WATER SUPPLY AND SANITATION PROGRAM

CONTRACT No.TWSB/ADB/004/2017-2018
CONSTRUCTION OF CHUKA AND CHOGORIA WATER SUPPLY AND SANITATION PROJECT

LOT 2: CHOGORIA WATER SUPPLY

DRAWING TITLE:
TREATED WATER GRAVITY MAIN - KABUI TANK LINE EXTENSION
PLAN & LONGITUDINAL SECTION
CH. 0+000.00 - 1+200.00
SHEET 1 OF 3

Designed by:	C.M.M	Drawn by:	C.M.M
Checked by:	N.J.N	Approved by:	R.S.R
Scale:	H- 1:4000, V- 1:400	Date:	NOV 2022

DRG No. M407/CG/TWKB/01 REV

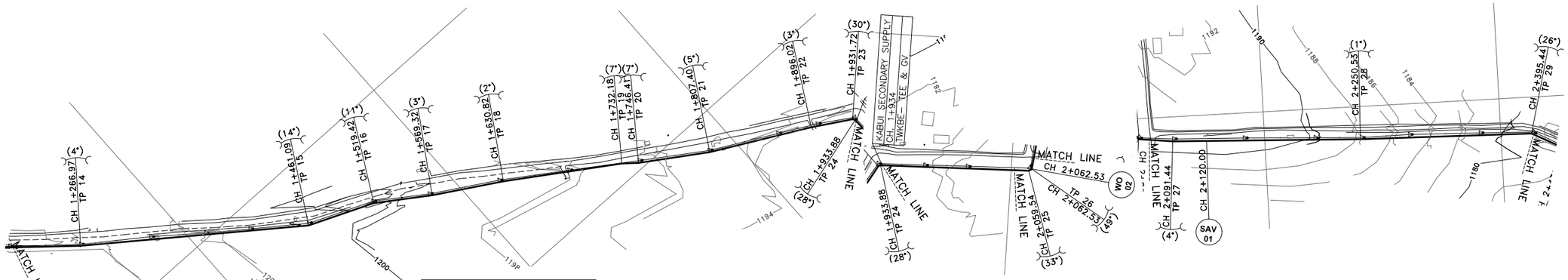

DETAIL CH. 1+934
LINE TW-KBE-TEE& GV - OFFTAKE

DESCRIPTION
1 No. REQUIRED

1. 1 Nos. 50x50mm DIA. HDPE PLAIN TEE WITH FLANGED BRANCH
2. 1 No. 50mm DIA. ALL FLANGED GATE VALVE
3. 1 No. 50X25mm DIA. ALL FLANGED CONCENTRIC TAPER
4. 1 No. 25mm DIA. PE FLANGE ADAPTER (STUB END) COMPLETE WITH METAL BACK UP RING
5. 1 No. 25mm DIA. HDPE PIPE (LENGTH TO SUIT ON SITE)

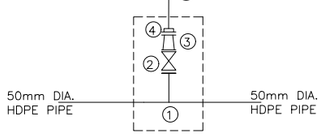

PLAN

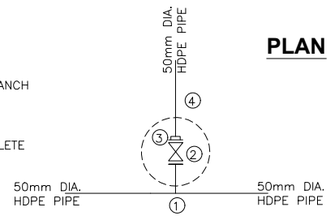

DETAIL CH. 2+062.53
LINE TW-KBE-TEE& GV(WO) - 02

DESCRIPTION
1 No. REQUIRED

1. 1 Nos. 50x50mm DIA. HDPE PLAIN LEVEL INVERT TEE WITH FLANGED BRANCH
2. 1 No. 50mm DIA. ALL FLANGED GATE VALVE
3. 1 No. 50mm DIA. PE FLANGE ADAPTER (STUB END) COMPLETE WITH METAL BACK UP RING
4. 1 No. 50mm DIA. HDPE PIPE (LENGTH TO SUIT ON SITE)

DETAIL CH. 2+120.0
LINE TW-KBE-TEE & SAV

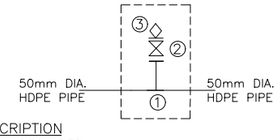

DESCRIPTION
1 No. REQUIRED

1. 1 Nos. 50x50mm DIA. HDPE PLAIN TEE WITH FLANGED BRANCH
2. 1 No. 50mm DIA. DOUBLE FLANGED GATE VALVE
3. 1 No. 50mm DIA. SINGLE ORIFICE AIR VALVE

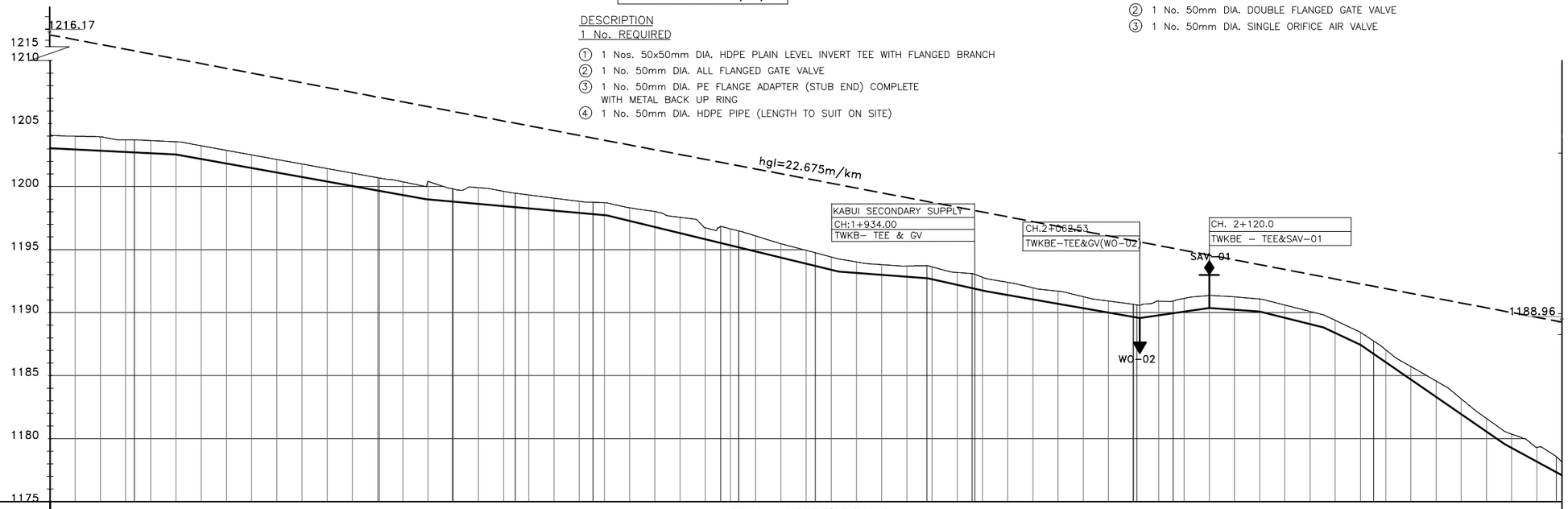

TYPE OF PIPE AND SIZE	OD 50mm HDPE PIPE (PN10)
GEOLOGICAL CONDITION	RED LOAM SOIL

CHAINAGE (m)	EXISTING GROUND LEVEL (m)	INVERT LEVELS (m)	DEPTH OF INVERT (m)
1+200.00	1204.07	1203.03	1.04
1+220.00	1204.00	1202.94	1.06
1+240.00	1203.94	1202.84	1.09
1+260.00	1203.71	1202.74	0.96
1+266.97	1203.71	1202.71	1.00
1+280.00	1203.65	1202.65	1.00
1+300.00	1203.56	1202.55	1.00
1+320.00	1203.24	1202.19	1.04
1+340.00	1202.87	1201.83	1.04
1+360.00	1202.51	1201.48	1.04
1+380.00	1202.15	1201.12	1.03
1+400.00	1201.79	1200.76	1.03
1+420.00	1201.43	1200.40	1.03
1+440.00	1201.07	1200.04	1.02
1+460.00	1200.70	1199.69	1.02
1+467.09	1200.69	1199.67	1.02
1+480.00	1200.38	1199.33	1.05
1+500.00	1199.93	1198.91	1.02
1+519.42	1199.84	1198.81	1.03
1+520.00	1199.82	1198.80	1.02
1+540.00	1199.91	1198.62	1.29
1+560.00	1199.62	1198.44	1.18
1+569.32	1199.47	1198.36	1.11
1+580.00	1199.34	1198.26	1.07
1+600.00	1199.08	1198.09	0.99
1+620.00	1198.83	1197.91	0.92
1+630.82	1198.76	1197.81	0.95
1+640.82	1198.72	1197.73	0.99
1+660.00	1198.32	1197.27	1.05
1+680.00	1198.03	1196.79	1.24
1+700.00	1197.56	1196.30	1.26
1+720.00	1196.73	1195.82	0.91
1+732.18	1196.84	1195.52	1.32
1+740.00	1196.64	1195.33	1.31
1+746.41	1196.48	1195.18	1.30
1+760.00	1196.08	1194.85	1.23
1+780.00	1195.46	1194.37	1.10
1+800.00	1194.94	1193.88	1.06
1+807.40	1194.75	1193.70	1.05
1+820.00	1194.41	1193.40	1.01
1+825.99	1194.26	1193.26	1.00
1+840.00	1194.02	1193.15	0.87
1+860.00	1193.80	1193.00	0.80
1+880.00	1193.69	1192.85	0.84
1+896.53	1193.73	1192.73	0.99
1+900.00	1193.62	1192.65	0.97
1+920.00	1193.18	1192.21	0.98
1+931.72	1193.10	1191.94	1.15
1+933.88	1192.81	1191.80	1.01
1+942.88	1192.80	1191.79	1.01
1+953.88	1192.80	1191.79	1.01
1+960.00	1192.40	1191.40	1.00
1+980.00	1191.97	1191.05	0.92
2+000.00	1191.70	1190.70	1.00
2+020.00	1191.26	1190.35	0.91
2+040.00	1190.92	1190.00	0.91
2+053.54	1190.96	1190.07	0.89
2+062.53	1190.91	1189.97	0.94
2+062.53	1190.91	1189.96	0.95
2+080.00	1190.91	1189.79	1.11
2+091.44	1190.93	1189.96	0.97
2+100.00	1191.12	1190.08	1.05
2+120.00	1191.37	1190.37	1.00
2+140.00	1191.25	1190.22	1.03
2+160.00	1191.08	1190.08	1.00
2+180.00	1190.60	1189.58	1.02
2+200.00	1190.09	1189.09	1.01
2+210.71	1189.82	1188.82	1.00
2+220.00	1189.38	1188.38	1.00
2+240.00	1188.44	1187.44	1.00
2+250.53	1187.74	1186.72	1.02
2+260.00	1187.05	1186.06	0.99
2+280.00	1185.72	1184.69	1.03
2+300.00	1184.57	1183.31	1.26
2+320.00	1183.15	1181.93	1.22
2+340.00	1181.60	1180.56	1.04
2+354.48	1180.56	1179.56	1.00
2+360.00	1180.36	1179.26	1.10
2+380.00	1179.31	1178.17	1.14
2+395.44	1178.58	1177.34	1.25
2+400.00	1178.13	1177.09	1.05

SLOPE OF PIPE (H/V): 1:206.25 | 1:55.87 | 1:111.49 | 1:41.32 | 1:134.21 | 1:44.71 | 1:57.48 | 1:69.32 | 1:137.56 | 1:40.36 | 1:21.22 | 1:14.52 | 1:18.41

REFERENCE PEG NO.: TP 14, TP 15, TP 16, TP 17, TP 18, TP 19, TP 20, TP 21, TP 22, TP 23, TP 24, TP 25, TP 26, TP 27, TP 28, TP 29

LONGITUDINAL SECTION

0 100 200m

NOTES:

1. CONTOUR LEVELS ARE IN METERS AT TWO METER INTERVALS
2. GRID VALUES ARE IN METERS AT 200 METER INTERVALS
3. GEOLOGICAL CONDITIONS INDICATED ON DRAWING ARE FOR GENERAL GUIDANCE ONLY
4. DRAWING TO BE READ IN CONJUNCTION WITH STANDARD DRAWINGS

LEGEND:

- ROAD (TARMAC)
- ROAD / TRACK (EARTH / MURRAM)
- FENCE / HEDGE
- 1480 CONTOURS
- ELECTRIC POST
- CULVERT
- GATE
- TEMPORARY STRUCTURES
- BUILDINGS
- KeNHA / KeRRA ROAD BEACON
- PROPOSED TREATED WATER GRAVITY MAIN
- TRUNK SEWER TS 1
- TP10 TRAVERSE POINT & No.
- TRIAL HOLE
- 30° HORIZONTAL BEND (H) OR VERTICAL BEND (V) WITH ANGLE INDICATED
- RIVER/STREAM
- V.J. VIKING JOHNSON
- GV GATE VALVE
- SV-01 SECTIONAL VALVE & No.
- WO-01 WASHOUT VALVE & No.
- SAV-01 AIR VALVE & No.
- WM WATER METER
- PROPOSED MASONRY CHAMBER
- PROPOSED VALVE BOX
- n PIPELINE GRADIENT WITH SLOPE DIRECTION (SLOPE MIN. OR 1 IN n)

ISSUED FOR CONSTRUCTION

REVISIONS		SIGN	DATE	APPROVED
	BY			
	CHECKED			
	BY			
	CHECKED			
	BY			
	CHECKED			
	BY			
	CHECKED			

CLIENT:
THE CHIEF EXECUTIVE OFFICER
TANA WATER WORKS DEVELOPMENT AGENCY
P.O BOX 1292 - 10100,
NYERI, KENYA

CONSULTING ENGINEERS:
MANGAT I.B PATEL(MIBP) LIMITED
P.O BOX 48674,00100-GPO,
NAIROBI, KENYA
E-MAIL: mibp.nairobi@mibp.co.ke
TEL: +254-2-2710500

PROJECT TITLE:
KENYA TOWNS SUSTAINABLE WATER SUPPLY AND SANITATION PROGRAM

CONTRACT No.TWSB/ADB/004/2017-2018
CONSTRUCTION OF CHUKA AND CHOGORIA WATER SUPPLY AND SANITATION PROJECT

LOT 2: CHOGORIA WATER SUPPLY

DRAWING TITLE:
TREATED WATER GRAVITY MAIN - KABUI TANK LINE EXTENSION
PLAN & LONGITUDINAL SECTION
CH. 1+200.00 - 2+400.00
SHEET 2 OF 3

Designed by:	C.M.M	Drawn by:	C.M.M
Checked by:	N.J.N	Approved by:	R.S.R
Scale:	H- 1:4000, V- 1:400	Date:	NOV 2022
DRG No.	M407/CG/TWKB/02	REV	

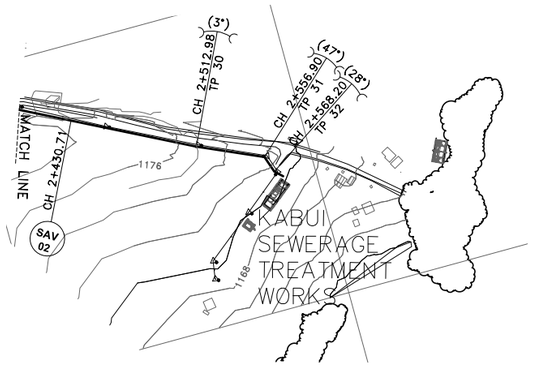

PLAN

DETAIL | **CH. 2+574.53** | **LINE TW-KBE-TEE & G.V**

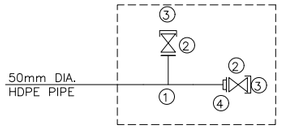

DESCRIPTION
1 No. REQUIRED

1. 1 Nos. 50X50mm DIA. HDPE PLAIN TEE WITH FLANGED BRANCH
2. 2 No. 50mm DIA. ALL FLANGED GATE VALVE
3. 2 No. 50mm DIA. BLANK FLANGE
4. 1 No. 50mm DIA. PE FLANGE ADAPTER (STUB END) COMPLETE WITH METAL BACK UP RING

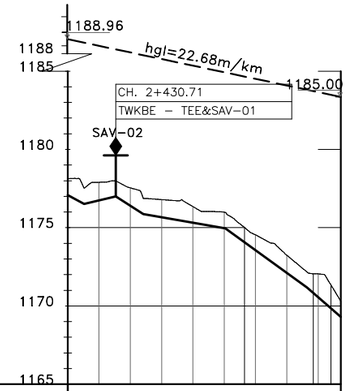

TYPE OF PIPE AND SIZE	OD 50mm HDPE PIPE (PN10)																						
GEOLOGICAL CONDITION	RED LOAM SOIL																						
EXISTING GROUND LEVEL (m)	178.13	177.52	177.90	177.99	177.54	176.87	176.79	176.35	175.99	175.02	174.54	173.24	172.17	172.08	172.08	171.34	170.29						
INVERT LEVELS (m)	177.09	176.52	176.74	176.99	176.40	175.87	175.67	175.32	174.98	174.07	173.56	172.10	171.17	170.88	170.88	169.84	169.29						
CHAINAGE (m)	2+400.00	2+410.48	2+420.00	2+430.71	2+440.00	2+449.29	2+460.00	2+480.00	2+500.00	2+512.98	2+520.00	2+540.00	2+552.88	2+555.90	2+568.20	2+572.20	2+574.53						
DEPTH OF INVERT (m)	1.05	1.00	1.16	1.00	1.15	1.00	1.13	1.03	1.01	0.95	0.98	1.14	1.00	1.00	1.20	1.50	1.00						
GRADIENT		1:42.85	1:13.88			1:57.72				1:13.76					1:11.55								
REFERENCE PEG NO.	TP 29									TP 30				TP 31	TP 32								

LONGITUDINAL SECTION

0 100 200m

NOTES:

1. CONTOUR LEVELS ARE IN METERS AT TWO METER INTERVALS
2. GRID VALUES ARE IN METERS AT 200 METER INTERVALS
3. GEOLOGICAL CONDITIONS INDICATED ON DRAWING ARE FOR GENERAL GUIDANCE ONLY
4. DRAWING TO BE READ IN CONJUNCTION WITH STANDARD DRAWINGS

LEGEND:

- ROAD (TARMAC)
- ROAD / TRACK (EARTH / MURRAM)
- FENCE / HEDGE
- 1480 — CONTOURS
- ELECTRIC POST
- CULVERT
- GATE
- TEMPORARY STRUCTURES
- BUILDINGS
- KeNHA / KeRRA ROAD BEACON
- PROPOSED TREATED WATER GRAVITY MAIN
- TRUNK SEWER TS 1
- TP10 — TRAVERSE POINT & No.
- TRIAL HOLE
- 30° — HORIZONTAL BEND (H) OR VERTICAL BEND (V) WITH ANGLE INDICATED
- RIVER/STREAM
- V.J. — VIKING JOHNSON
- GV — GATE VALVE
- SV-01 — SECTIONAL VALVE & No.
- WO-01 — WASHOUT VALVE & No.
- SAV-01 — AIR VALVE & No.
- WM — WATER METER
- PROPOSED MASONRY CHAMBER
- PROPOSED VALVE BOX
- n — PIPELINE GRADIENT WITH SLOPE DIRECTION (SLOPE MIN. OR 1 IN n)

ISSUED FOR CONSTRUCTION

	REVISIONS		SIGN	DATE	APPROVED
		BY			
		CHECKED			
		BY			
		CHECKED			
		BY			
		CHECKED			
		BY			
		CHECKED			

CLIENT:
THE CHIEF EXECUTIVE OFFICER
TANA WATER WORKS DEVELOPMENT AGENCY
P.O BOX 1292 - 10100,
NYERI, KENYA

CONSULTING ENGINEERS:
MANGAT I.B PATEL(MIBP) LIMITED
P.O BOX 48674,00100-GPO,
NAIROBI, KENYA
E-MAIL: mibp.nairobi@mibp.co.ke
TEL: +254-2-2710500

PROJECT TITLE:
KENYA TOWNS SUSTAINABLE WATER SUPPLY AND SANITATION PROGRAM

CONTRACT No.TWSB/ADB/004/2017-2018
CONSTRUCTION OF CHUKA AND CHOGORIA WATER SUPPLY AND SANITATION PROJECT

LOT 2: CHOGORIA WATER SUPPLY

DRAWING TITLE:
TREATED WATER GRAVITY MAIN - KABUI TANK LINE EXTENSION
PLAN & LONGITUDINAL SECTION
CH. 2+400.00 - 2+574.53
SHEET 3 OF 3

Designed by:	C.M.M	Drawn by:	C.M.M
Checked by:	N.J.N	Approved by:	R.S.R
Scale:	H- 1:4000, V- 1:400	Date:	NOV 2022
DRG No.	M407/CG/TWKBE/03	REV	

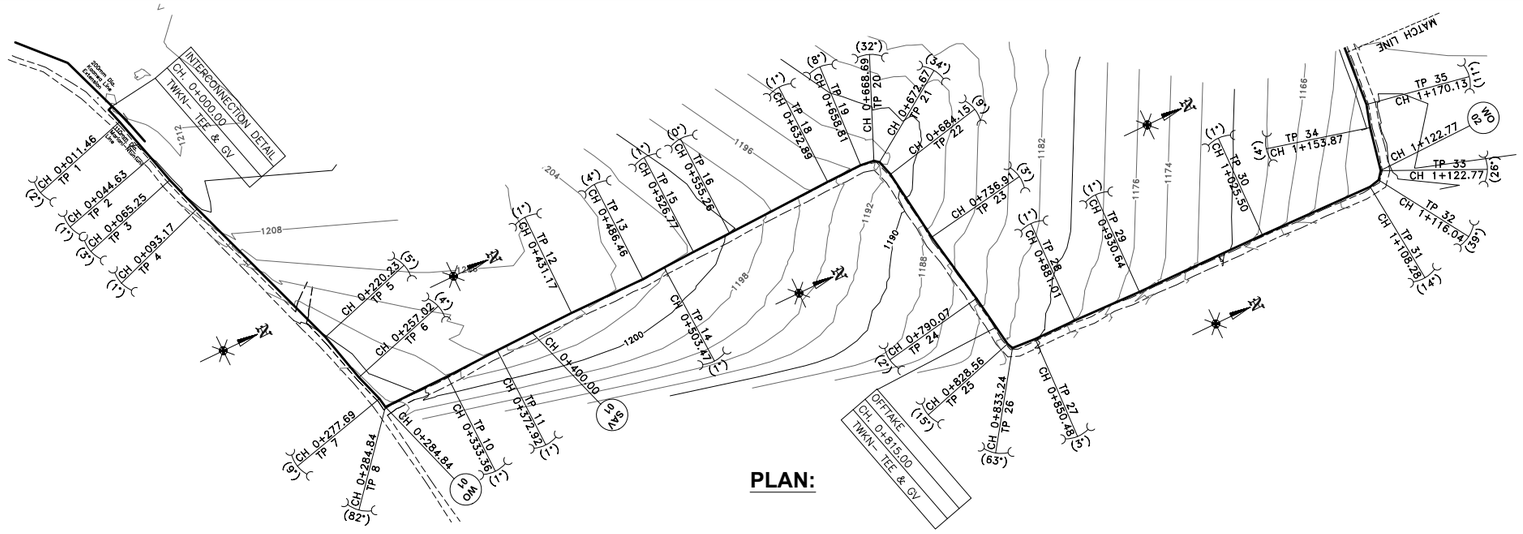

PLAN:

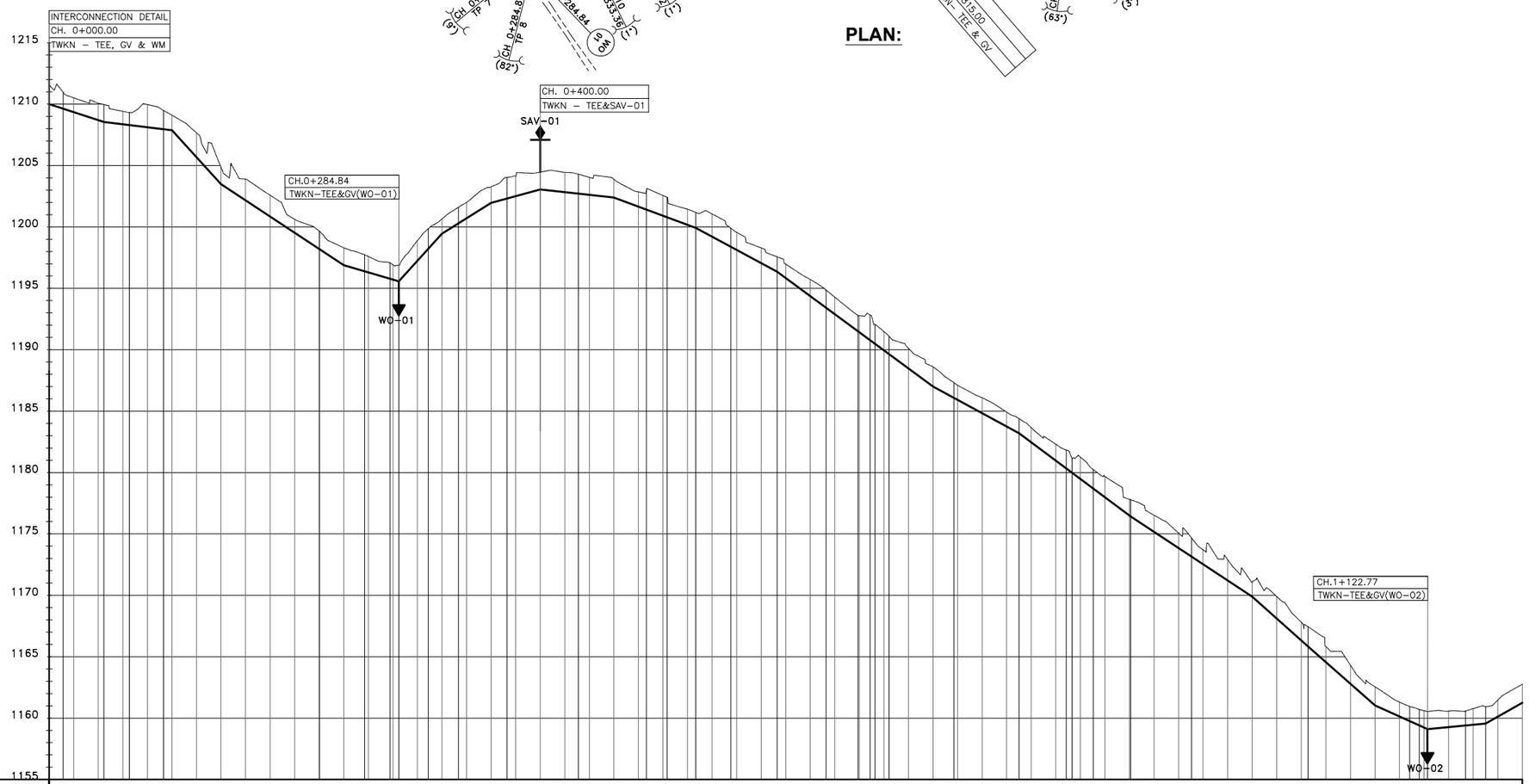

DATUM (m)

TYPE OF PIPE AND SIZE: DN110mm HDPE PIPE TO PN 16

GEOLOGICAL CONDITION: RED LOAM SOIL

CHAINAGE (m)	EXISTING GROUND LEVEL (m)	INVERT LEVELS (m)	DEPTH OF INVERT (m)	REFERENCE PEG NO.
0+000.00	1211.57	1210.00	1.57	TP 1
0+011.46	1210.96	1209.63	1.33	
0+020.00	1210.51	1209.35	1.16	
0+040.00	1210.07	1208.70	1.38	TP 2
0+044.63	1209.97	1208.55	1.42	TP 3
0+060.00	1209.42	1208.36	1.05	TP 4
0+065.25	1209.31	1208.30	1.01	
0+080.00	1208.12	1207.16	0.96	
0+093.17	1208.48	1207.26	1.22	
0+100.00	1208.10	1207.88	0.22	
0+120.00	1207.66	1205.69	1.97	
0+140.00	1204.85	1203.49	1.36	
0+160.00	1203.89	1202.17	1.72	
0+180.00	1202.58	1200.85	1.73	
0+200.00	1200.62	1199.52	1.10	
0+220.08	1199.65	1198.19	1.47	TP 5
0+240.00	1198.30	1196.88	1.42	
0+257.02	1197.73	1196.38	1.34	TP 6
0+260.00	1197.60	1196.30	1.30	
0+277.69	1197.09	1195.79	1.30	
0+280.00	1196.92	1195.72	1.21	TP 7
0+284.84	1196.89	1195.58	1.31	TP 8
0+300.00	1198.91	1197.24	1.66	TP 9
0+308.93	1199.87	1198.23	1.64	
0+320.00	1199.44	1198.23	1.21	
0+333.36	1201.59	1200.28	1.31	TP 10
0+340.00	1201.99	1200.70	1.29	
0+360.00	1203.27	1201.96	1.31	TP 11
0+372.92	1204.04	1202.31	1.73	
0+380.00	1204.14	1202.50	1.64	
0+400.00	1204.46	1203.05	1.42	
0+420.00	1204.45	1202.83	1.62	TP 12
0+431.17	1204.30	1202.71	1.59	
0+440.00	1204.04	1202.62	1.42	
0+460.00	1203.89	1202.41	1.48	
0+480.00	1202.85	1201.66	1.19	TP 13
0+486.46	1202.56	1201.42	1.14	
0+500.00	1202.56	1200.92	1.65	
0+503.47	1202.41	1200.79	1.63	TP 14
0+520.00	1201.44	1200.17	1.27	
0+528.77	1201.18	1199.92	1.26	
0+540.00	1201.06	1199.21	1.85	TP 15
0+555.26	1199.80	1198.39	1.41	
0+560.00	1199.57	1198.13	1.44	TP 16
0+580.00	1198.29	1197.06	1.24	
0+583.47	1197.57	1196.36	1.21	
0+600.00	1196.97	1195.84	1.13	
0+620.00	1195.72	1194.37	1.35	TP 17
0+632.89	1194.28	1192.79	1.49	
0+640.00	1194.42	1192.95	1.48	
0+658.81	1192.79	1191.51	1.28	TP 18
0+668.69	1192.82	1190.78	2.04	
0+672.67	1192.82	1190.78	2.04	
0+680.00	1192.66	1190.48	2.18	
0+684.15	1191.48	1189.84	1.64	
0+700.00	1191.10	1189.47	1.63	
0+720.00	1190.12	1187.00	3.12	TP 19
0+736.91	1188.60	1186.08	2.52	TP 20
0+740.00	1187.33	1185.91	1.42	
0+760.00	1187.09	1184.92	2.17	TP 21
0+780.00	1186.09	1183.74	2.35	TP 22
0+790.07	1184.92	1183.19	1.73	
0+800.00	1184.39	1182.45	1.94	
0+820.00	1183.65	1180.96	2.69	TP 23
0+825.55	1182.31	1180.31	2.00	
0+828.56	1181.43	1179.38	2.05	TP 24
0+833.24	1181.26	1179.48	1.78	TP 25
0+850.48	1180.24	1178.70	1.54	TP 26
0+860.00	1179.66	1177.99	1.67	
0+880.00	1177.82	1176.51	1.31	TP 27
0+881.01	1177.79	1176.43	1.35	
0+900.00	1176.53	1175.18	1.35	
0+920.00	1175.07	1173.86	1.22	TP 28
0+930.64	1174.67	1173.16	1.51	
0+940.00	1173.71	1172.54	1.17	
0+960.00	1172.90	1171.22	1.69	TP 29
0+980.00	1171.11	1169.90	1.21	
1+000.00	1169.91	1168.12	1.79	TP 30
1+020.00	1167.81	1166.33	1.48	
1+025.50	1167.45	1165.84	1.60	
1+040.00	1165.82	1164.56	1.26	
1+060.00	1164.31	1162.80	1.51	TP 31
1+080.00	1162.55	1161.03	1.52	
1+100.00	1161.30	1160.13	1.17	TP 32
1+108.28	1160.84	1159.76	1.19	
1+116.04	1160.70	1159.40	1.30	
1+120.00	1160.64	1159.34	1.30	
1+122.77	1160.54	1159.10	1.44	TP 33
1+140.00	1159.27	1157.77	1.50	
1+153.87	1158.40	1156.87	1.53	TP 34
1+170.13	1157.46	1155.93	1.53	
1+180.00	1160.92	1159.56	1.36	
1+200.00	1161.47	1160.12	1.35	TP 35
	1162.76	1161.26	1.50	

SLOPE OF PIPE (H/V): −1:30.71 | −1:82.92 | −1:9.12 | −1:15.11 | −1:34.47 | 1:9.10 | 1:15.88 | 1:36.86 | −1:93.72 | −1:26.86 | −1:18.59 | −1:13.57 | −1:18.40 | −1:13.46 | −1:15.15 | −1:11.22 | −1:11.34 | −1:22.11 | 1:102.78 | 1:17,634.58

LONGITUDINAL SECTION

0 100 200m

NOTES:

1. CONTOUR LEVELS ARE IN METERS AT TWO METER INTERVALS
2. GRID VALUES ARE IN METERS AT 200 METER INTERVALS
3. GEOLOGICAL CONDITIONS INDICATED ON DRAWING ARE FOR GENERAL GUIDANCE ONLY
4. MINIMUM PIPELINE SLOPES TO BE 1:200
5. DRAWING TO BE READ IN CONJUCTION WITH STANDARD DRAWINGS

LEGEND:

- ROAD (TARMAC)
- ROAD / TRACK (EARTH / MURRAM)
- FENCE / HEDGE
- 1480 CONTOURS
- ELECTRIC POST
- CULVERT
- GATE
- TEMPORARY STRUCTURES
- BUILDINGS
- PROPOSED TREATED WATER GRAVITY MAIN
- TP10 TRAVERSE POINT & No.
- TRIAL HOLE
- 30° HORIZONTAL BEND (H) OR VERTICAL BEND (V) WITH ANGLE INDICATED
- RIVER/STREAM
- V.J. VIKING JOHNSON
- GV GATE VALVE
- SV-01 SECTIONAL VALVE & No.
- WO-01 WASHOUT VALVE & No.
- SAV-01 AIR VALVE & No.
- WM WATER METER
- PROPOSED MASONRY CHAMBER
- PROPOSED VALVE BOX
- n PIPELINE GRADIENT WITH SLOPE DIRECTION (SLOPE MIN. OR 1 IN n)

ISSUED FOR CONSTRUCTION

REVISIONS		SIGN	DATE	APPROVED
	BY			
	CHECKED			
	BY			
	CHECKED			
	BY			
	CHECKED			
	BY			
	CHECKED			

CLIENT: THE CHIEF EXECUTIVE OFFICER
TANA WATER DEVELOPMENT AGENCY
P.O BOX 1292 - 10100,
NYERI, KENYA

CONSULTING ENGINEERS:
MANGAT I.B PATEL(MIBP) LIMITED
P.O BOX 48674,00100-GPO,
NAIROBI, KENYA
E-MAIL: mibp.nairobi@mibp.co.ke
TEL: +254-2-2710500

PROJECT TITLE:
KENYA TOWNS SUSTAINABLE WATER SUPPLY AND SANITATION PROGRAM

CONTRACT No.TWSB/ADB/003/2019-2020

CONSTRUCTION OF CHUKA AND CHOGORIA WATER SUPPLY AND SANITATION PROJECT

LOT 1: CHUKA WATER SUPPLY

DRAWING TITLE:
TREATED WATER GRAVITY MAIN KAANWA LINE EXTENSION (NTUNTUNI LINE) PLAN & LONGITUDINAL SECTION
CH. 0+000.00 - 1+200.00
SHEET 1 OF 7

Designed by:	P.W.K	Drawn by:	W.M.M
Checked by:	N.J.N	Approved by:	N.J.N
Scale:	H- 1:4000, V- 1:400	Date:	JUNE 2025

DRG No. M407/CK/TWKN/01 REV 1

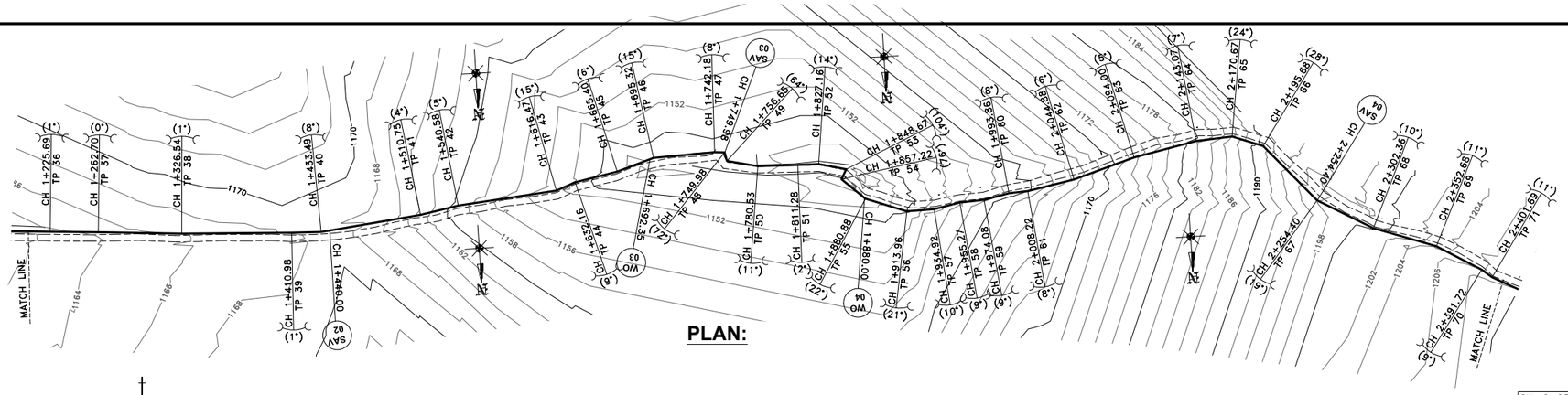

PLAN:

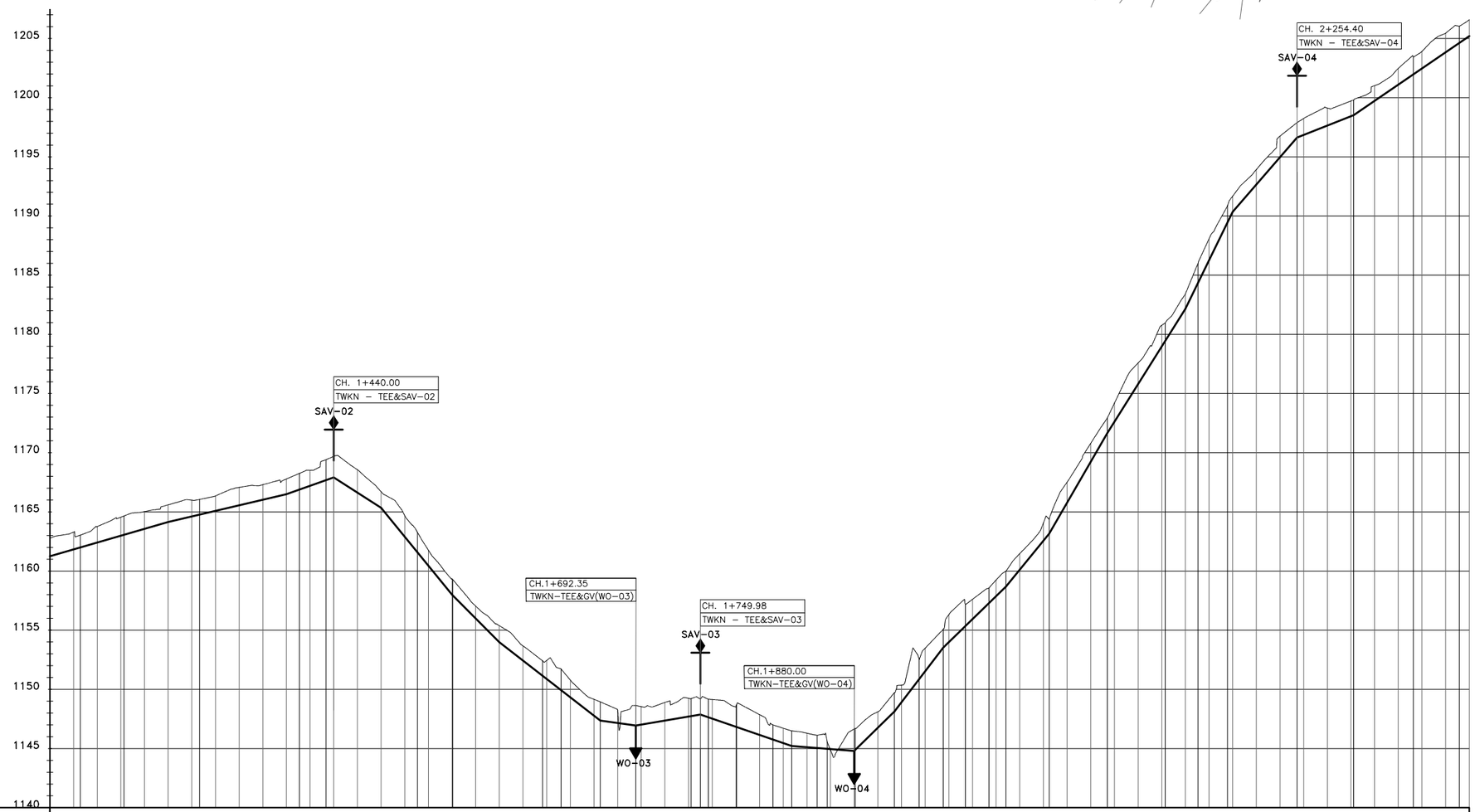

DATUM (m)

TYPE OF PIPE AND SIZE: DN110mm HDPE PIPE TO PN 16

GEOLOGICAL CONDITION: RED LOAM SOIL

CHAINAGE (m)	EXISTING GROUND LEVEL (m)	INVERT LEVELS (m)	DEPTH OF INVERT (m)	SLOPE OF PIPE (H/V)	REFERENCE PEG NO.
1+200.00	1162.76	1161.26	1.50	1:17.63	
1+220.00	1163.29	1161.83	1.46	1:34.58	
1+225.69	1163.03	1162.00	1.03		TP 36
1+240.00	1163.76	1162.41	1.34		
1+260.00	1164.55	1162.99	1.56	1:42.63	
1+262.70	1164.66	1163.07	1.59		TP 37
1+280.00	1165.02	1163.57	1.45		
1+300.00	1165.59	1164.15	1.45		
1+320.00	1165.99	1164.62	1.37		
1+326.54	1166.05	1164.77	1.28		TP 38
1+340.00	1166.35	1165.09	1.26		
1+360.00	1167.07	1165.56	1.51		
1+380.00	1167.29	1166.02	1.27		
1+400.00	1167.78	1166.49	1.29		
1+410.98	1168.25	1166.88	1.36	1:28.17	TP 39
1+420.00	1168.51	1167.20	1.31		
1+433.49	1168.84	1167.68	1.16		TP 40
1+440.00	1168.89	1167.91	1.22		
1+460.00	1168.56	1166.63	1.93	-1:15.56	
1+480.00	1166.71	1165.34	1.36		
1+500.00	1164.69	1162.89	1.80	-1:8.15	
1+510.75	1163.27	1161.57	1.70		TP 41
1+520.00	1161.76	1160.44	1.33		
1+540.00	1159.34	1157.98	1.36	-1:10.00	
1+540.58	1159.29	1157.93	1.36		TP 42
1+560.00	1157.04	1155.98	1.05		
1+580.00	1155.38	1153.98	1.40		
1+600.00	1153.67	1152.43	1.24	-1:12.89	
1+616.47	1152.42	1151.15	1.26		TP 43
1+620.00	1152.44	1150.88	1.56		
1+632.16	1151.72	1149.94	1.79		TP 44
1+640.00	1150.78	1149.33	1.46		
1+656.40	1148.16	1147.28	0.88		TP 45
1+660.00	1148.34	1147.36	0.98		
1+680.00	1148.27	1147.16	1.11	-1:73.37	
1+693.35	1148.65	1146.95	1.69		TP 46
1+700.00	1148.54	1147.03	1.51		
1+720.00	1148.89	1147.36	1.53	1:59.83	
1+740.00	1148.24	1147.70	1.54		
1+742.18	1148.18	1147.67	1.52		TP 47
1+749.98	1148.17	1147.84	1.33		TP 48
1+756.65	1148.17	1147.55	1.62	-1:29.10	TP 49
1+760.00	1149.14	1147.52	1.62		
1+780.00	1150.56	1148.54	1.71		
1+780.53	1150.56	1148.67	1.88		TP 50
1+800.00	1147.86	1146.15	1.72		
1+811.28	1147.00	1145.76	1.24		TP 51
1+820.00	1146.71	1145.46	1.26		
1+827.16	1146.49	1145.21	1.28		TP 52
1+840.00	1146.29	1145.11	1.18	-1:126.89	
1+848.67	1146.12	1145.05	1.08		TP 53
1+857.22	1144.98	1145.54	0.56		TP 54
1+860.00	1144.86	1144.96	-0.10		
1+880.00	1146.65	1144.80	1.85	1:10.21	
1+880.88	1146.70	1144.89	1.81		TP 55
1+900.00	1148.10	1146.76	1.34		
1+913.96	1148.72	1148.13	1.59	1:7.64	
1+920.00	1150.56	1148.92	1.64		TP 56
1+934.92	1152.56	1150.87	1.69		TP 57
1+940.00	1153.48	1151.53	1.95	1:10.28	
1+955.27	1155.07	1153.53	1.54		TP 58
1+960.00	1156.32	1153.99	2.32		
1+974.08	1157.21	1155.36	1.85		TP 59
1+980.00	1157.81	1155.94	1.87	1:8.17	
1+993.86	1158.56	1157.28	1.27		TP 60
2+000.00	1160.00	1158.54	1.46		
2+008.22	1160.46	1158.68	1.31		TP 61
2+020.00	1161.46	1160.13	1.34	1:5.78	
2+040.00	1164.07	1162.57	1.50		
2+044.88	1164.44	1163.17	1.27		TP 62
2+060.00	1167.51	1165.78	1.73		
2+080.00	1170.79	1169.24	1.55	1:6.30	
2+084.00	1171.66	1170.38	1.28		TP 63
2+100.00	1174.18	1172.62	1.56		
2+120.00	1177.57	1175.79	1.78	1:4.87	
2+140.00	1181.76	1178.97	1.79		
2+143.07	1182.04	1179.45	1.59		TP 64
2+160.00	1183.41	1182.14	1.27		
2+170.67	1186.97	1184.33	1.64	1:8.68	
2+180.00	1188.07	1186.25	1.82		TP 65
2+195.68	1190.88	1189.47	1.41		TP 66
2+200.00	1191.88	1190.35	1.53		
2+220.00	1193.93	1192.66	1.27		
2+240.00	1196.75	1194.96	1.79	1:28.19	
2+254.40	1197.90	1196.62	1.27		TP 67
2+260.00	1198.25	1196.85	1.40		
2+280.00	1199.13	1197.64	1.49		
2+300.00	1199.72	1198.43	1.29	1:14.63	
2+302.36	1199.79	1198.53	1.27		TP 68
2+320.00	1201.02	1199.73	1.28		
2+340.00	1202.48	1201.10	1.38	1:16.50	
2+352.68	1203.43	1201.97	1.46		TP 69
2+360.00	1203.91	1202.47	1.44		
2+380.00	1205.45	1203.83	1.61		
2+391.72	1206.04	1204.63	1.41		TP 70
2+400.00	1206.59	1205.20	1.39		

LONGITUDINAL SECTION

0 100 200m

NOTES:

1. CONTOUR LEVELS ARE IN METERS AT TWO METER INTERVALS
2. GRID VALUES ARE IN METERS AT 200 METER INTERVALS
3. GEOLOGICAL CONDITIONS INDICATED ON DRAWING ARE FOR GENERAL GUIDANCE ONLY
4. MINIMUM PIPELINE SLOPES TO BE 1:200
5. DRAWING TO BE READ IN CONJUCTION WITH STANDARD DRAWINGS

LEGEND:

- ROAD (TARMAC)
- ROAD / TRACK (EARTH / MURRAM)
- FENCE / HEDGE
- 1480 CONTOURS
- ELECTRIC POST
- CULVERT
- GATE
- TEMPORARY STRUCTURES
- BUILDINGS
- PROPOSED TREATED WATER GRAVITY MAIN
- TP10 TRAVERSE POINT & No.
- TRIAL HOLE
- 30° HORIZONTAL BEND (H) OR VERTICAL BEND (V) WITH ANGLE INDICATED
- RIVER/STREAM
- V.J. VIKING JOHNSON
- GV GATE VALVE
- SV-01 SECTIONAL VALVE & No.
- WO-01 WASHOUT VALVE & No.
- SAV-01 AIR VALVE & No.
- WM WATER METER
- PROPOSED MASONRY CHAMBER
- PROPOSED VALVE BOX
- n PIPELINE GRADIENT WITH SLOPE DIRECTION (SLOPE MIN. OR 1 IN n)

ISSUED FOR CONSTRUCTION

REVISIONS		SIGN	DATE	APPROVED
	BY			
	CHECKED			
	BY			
	CHECKED			
	BY			
	CHECKED			
	BY			
	CHECKED			

CLIENT:
THE CHIEF EXECUTIVE OFFICER
TANA WATER DEVELOPMENT AGENCY
P.O BOX 1292 - 10100,
NYERI, KENYA

CONSULTING ENGINEERS:
MANGAT I.B PATEL(MIBP) LIMITED
P.O BOX 48674,00100-GPO,
NAIROBI, KENYA
E-MAIL: mibp.nairobi@mibp.co.ke
TEL: +254-2-2710500

PROJECT TITLE:
KENYA TOWNS SUSTAINABLE WATER SUPPLY AND SANITATION PROGRAM

CONTRACT No.TWSB/ADB/003/2019-2020

CONSTRUCTION OF CHUKA AND CHOGORIA WATER SUPPLY AND SANITATION PROJECT

LOT 1: CHUKA WATER SUPPLY

DRAWING TITLE:
TREATED WATER GRAVITY MAIN
KAANWA LINE EXTENSION
(NTUNTUNI LINE)
PLAN & LONGITUDINAL SECTION
CH. 1+200.00 - 2+400.00
SHEET 2 OF 7

Designed by:	P.W.K	Drawn by:	W.M.M
Checked by:	N.J.N	Approved by:	N.J.N
Scale:	H- 1:4000, V- 1:400	Date:	JUNE 2025

DRG No. M407/CK/TWKN/02 REV 1

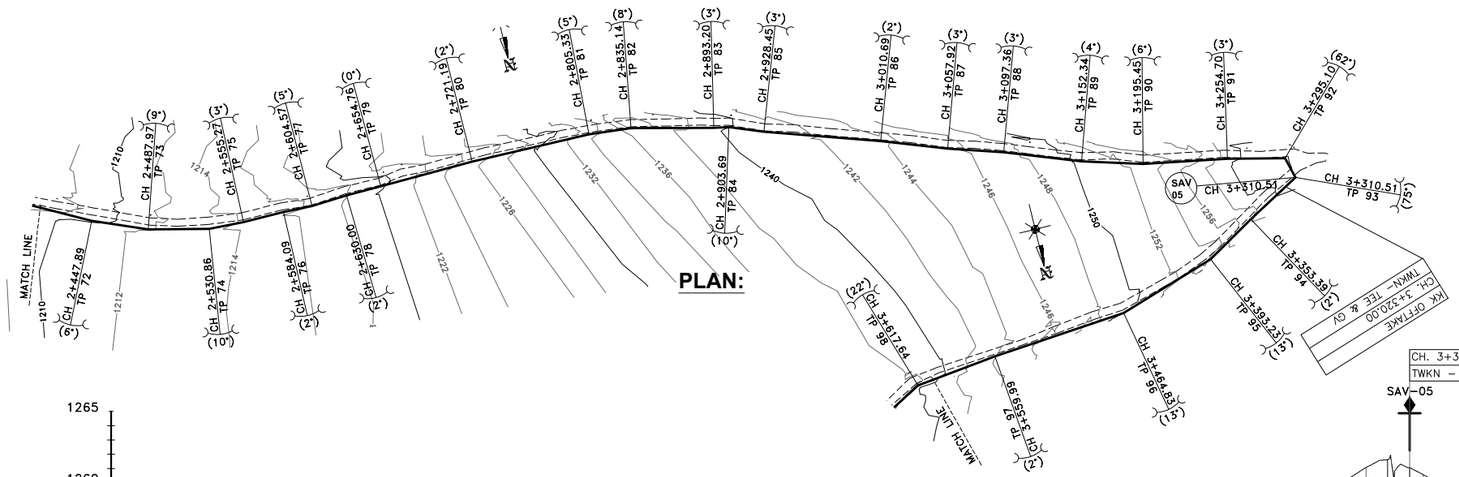

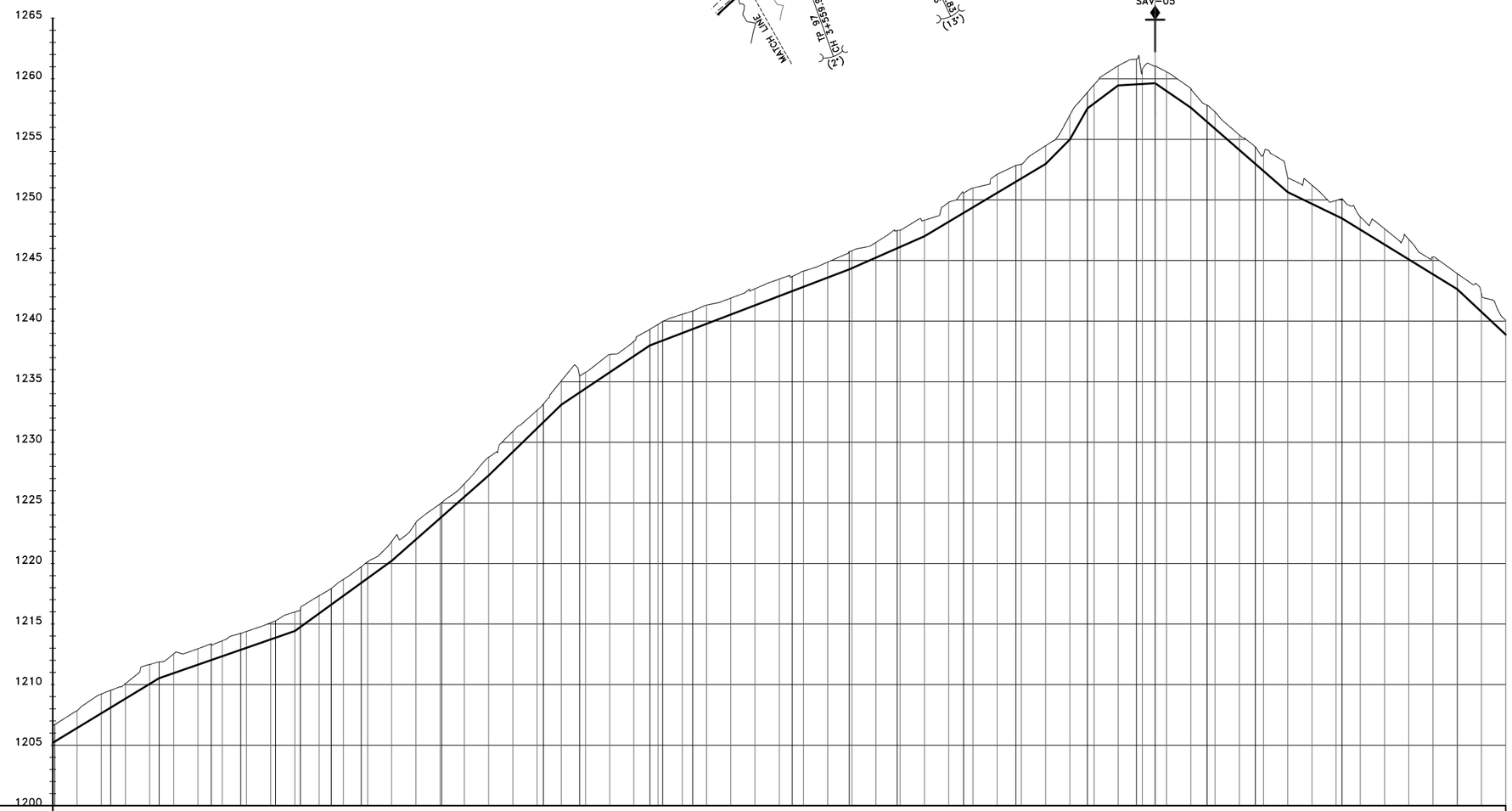

TYPE OF PIPE AND SIZE: DN110mm HDPE PIPE TO PN 16

GEOLOGICAL CONDITION: RED LOAM SOIL

REFERENCE PEG NO.	EXISTING GROUND LEVEL (m)	INVERT LEVELS (m)	CHAINAGE (m)	DEPTH OF INVERT (m)
TP 71	1206.59	1205.20	2+400.00	1.39
	1206.73	1205.30	2+401.69	1.42
	1207.84	1206.41	2+420.00	1.43
TP 72	1209.22	1207.62	2+440.00	1.59
	1209.53	1208.10	2+447.89	1.43
	1210.07	1208.84	2+460.00	1.24
TP 73	1211.66	1210.05	2+480.00	1.61
	1211.88	1210.53	2+487.97	1.35
	1212.55	1210.95	2+500.00	1.60
TP 74	1212.86	1211.64	2+520.00	1.31
	1213.37	1212.02	2+530.86	1.35
	1213.61	1212.34	2+540.00	1.27
TP 75	1214.24	1212.87	2+555.27	1.37
	1214.39	1213.04	2+560.00	1.35
	1215.10	1213.73	2+580.00	1.37
TP 76	1215.26	1213.87	2+584.09	1.39
	1215.99	1214.43	2+600.00	1.57
TP 77	1216.13	1214.76	2+604.57	1.38
	1217.33	1215.87	2+620.00	1.46
	1217.92	1216.59	2+630.00	1.32
TP 78	1218.68	1217.32	2+640.00	1.36
	1219.72	1218.38	2+654.76	1.34
TP 79	1220.14	1218.76	2+660.00	1.38
	1221.82	1220.20	2+680.00	1.61
TP 80	1223.38	1221.97	2+700.00	1.42
	1224.92	1223.73	2+720.00	1.19
	1225.02	1223.84	2+721.19	1.18
	1226.57	1225.50	2+740.00	1.07
TP 81	1228.76	1227.26	2+760.00	1.50
	1230.89	1229.21	2+780.00	1.68
	1231.16	1229.68	2+785.33	1.48
TP 82	1232.64	1231.16	2+800.00	1.48
	1233.16	1231.67	2+805.33	1.49
	1235.06	1233.10	2+820.00	1.96
TP 83	1235.49	1234.12	2+835.14	1.37
	1235.77	1234.44	2+840.00	1.33
TP 84	1237.24	1235.78	2+860.00	1.47
	1238.33	1237.12	2+880.00	1.22
TP 85	1239.32	1238.00	2+893.20	1.32
	1239.74	1238.26	2+900.00	1.48
	1239.97	1238.40	2+903.69	1.57
	1240.56	1239.02	2+920.00	1.54
	1240.84	1239.34	2+928.45	1.49
	1241.32	1239.78	2+940.00	1.54
TP 86	1241.90	1240.54	2+960.00	1.35
	1242.67	1241.31	2+980.00	1.36
TP 87	1243.47	1242.07	3+000.00	1.40
	1243.68	1242.47	3+010.69	1.21
	1244.12	1242.83	3+020.00	1.29
TP 88	1244.87	1243.59	3+040.00	1.28
TP 89	1245.72	1244.27	3+057.92	1.45
	1245.81	1244.36	3+060.00	1.44
	1246.50	1245.25	3+080.00	1.26
	1247.47	1246.01	3+097.36	1.46
	1247.51	1246.13	3+100.00	1.38
	1248.33	1247.01	3+120.00	1.32
TP 90	1249.81	1248.20	3+140.00	1.61
	1250.58	1248.84	3+152.34	1.64
	1250.98	1249.39	3+160.00	1.59
	1252.12	1250.59	3+180.00	1.53
TP 91	1252.85	1251.51	3+195.45	1.34
	1252.96	1251.78	3+200.00	1.18
	1254.47	1252.97	3+220.00	1.50
	1256.98	1255.00	3+240.00	1.98
	1258.90	1257.56	3+254.70	1.34
	1259.51	1257.96	3+260.00	1.55
	1261.07	1259.45	3+280.00	1.63
TP 92	1261.61	1258.54	3+285.10	2.07
	1261.67	1259.67	3+295.00	2.00
TP 93	1261.07	1259.64	3+310.51	1.43
	1260.57	1258.99	3+320.00	1.58
TP 94	1259.20	1257.62	3+340.00	1.58
	1257.82	1256.45	3+353.39	1.37
	1257.47	1255.87	3+360.00	1.40
	1255.37	1254.13	3+380.00	1.24
TP 95	1254.39	1252.97	3+393.23	1.42
	1253.78	1252.38	3+400.00	1.39
	1251.82	1250.64	3+420.00	1.19
	1251.22	1249.67	3+440.00	1.55
	1249.96	1248.71	3+460.00	1.25
TP 96	1250.11	1248.48	3+464.83	1.63
	1248.61	1247.55	3+480.00	1.07
	1247.62	1246.32	3+500.00	1.30
	1246.75	1245.09	3+520.00	1.65
	1245.29	1243.87	3+540.00	1.43
TP 97	1243.92	1242.64	3+559.39	1.28
	1242.26	1240.76	3+580.00	1.51
	1240.08	1238.88	3+600.00	1.20

SLOPE OF PIPE (H/V): 1:14.63, 1:16.50, 1:28.75, 1:13.85, 1:11.33, 1:10.27, 1:14.95, 1:26.26, 1:22.67, 1:16.78, 1:9.85, 1:5.74, 1:13.40, 1:158.25, –1:14.56, –1:11.46, –1:20.78, –1:16.29, –1:10.68, –1:14.23

LONGITUDINAL SECTION

LONGITUDINAL SECTION

0 100 200m

NOTES:

1. CONTOUR LEVELS ARE IN METERS AT TWO METER INTERVALS
2. GRID VALUES ARE IN METERS AT 200 METER INTERVALS
3. GEOLOGICAL CONDITIONS INDICATED ON DRAWING ARE FOR GENERAL GUIDANCE ONLY
4. MINIMUM PIPELINE SLOPES TO BE 1:200
5. DRAWING TO BE READ IN CONJUCTION WITH STANDARD DRAWINGS

LEGEND:

- ROAD (TARMAC)
- ROAD / TRACK (EARTH / MURRAM)
- FENCE / HEDGE
- 1480 CONTOURS
- ELECTRIC POST
- CULVERT
- GATE
- TEMPORARY STRUCTURES
- BUILDINGS
- PROPOSED TREATED WATER GRAVITY MAIN
- TP10 TRAVERSE POINT & No.
- TRIAL HOLE
- 30° HORIZONTAL BEND (H) OR VERTICAL BEND (V) WITH ANGLE INDICATED
- RIVER/STREAM
- V.J. VIKING JOHNSON
- GV GATE VALVE
- SV-01 SECTIONAL VALVE & No.
- WO-01 WASHOUT VALVE & No.
- SAV-01 AIR VALVE & No.
- WM WATER METER
- PROPOSED MASONRY CHAMBER
- PROPOSED VALVE BOX
- n PIPELINE GRADIENT WITH SLOPE DIRECTION (SLOPE MIN. OR 1 IN n)

ISSUED FOR CONSTRUCTION

REVISIONS		SIGN	DATE	APPROVED
	BY			
	CHECKED			
	BY			
	CHECKED			
	BY			
	CHECKED			
	BY			
	CHECKED			

CLIENT: **THE CHIEF EXECUTIVE OFFICER TANA WATER DEVELOPMENT AGENCY**
P.O BOX 1292 - 10100,
NYERI, KENYA

CONSULTING ENGINEERS:
MANGAT I.B PATEL(MIBP) LIMITED
P.O BOX 48674,00100-GPO,
NAIROBI, KENYA
E-MAIL: mibp.nairobi@mibp.co.ke
TEL: +254-2-2710500

PROJECT TITLE:
KENYA TOWNS SUSTAINABLE WATER SUPPLY AND SANITATION PROGRAM

CONTRACT No.TWSB/ADB/003/2019-2020

CONSTRUCTION OF CHUKA AND CHOGORIA WATER SUPPLY AND SANITATION PROJECT

LOT 1: CHUKA WATER SUPPLY

DRAWING TITLE:
TREATED WATER GRAVITY MAIN KAANWA LINE EXTENSION (NTUNTUNI LINE) PLAN & LONGITUDINAL SECTION
CH. 2+400.00- 3+600.00
SHEET 3 OF 7

Designed by:	P.W.K	Drawn by:	W.M.M
Checked by:	N.J.N	Approved by:	N.J.N
Scale:	H- 1:4000, V- 1:400	Date:	JUNE 2025

DRG No. M407/CK/TWKN/03 REV 1

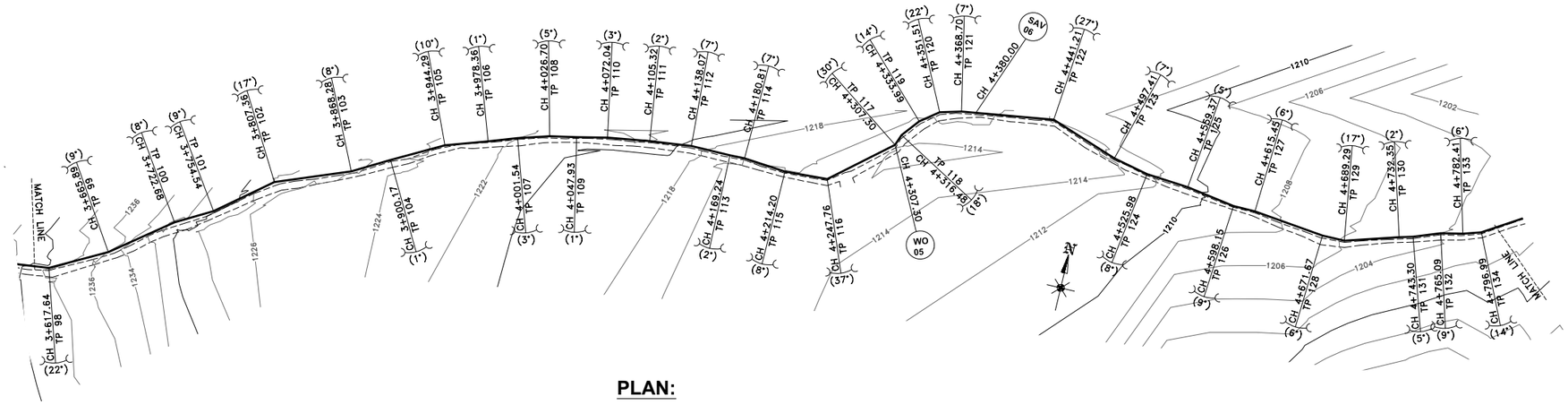

PLAN:

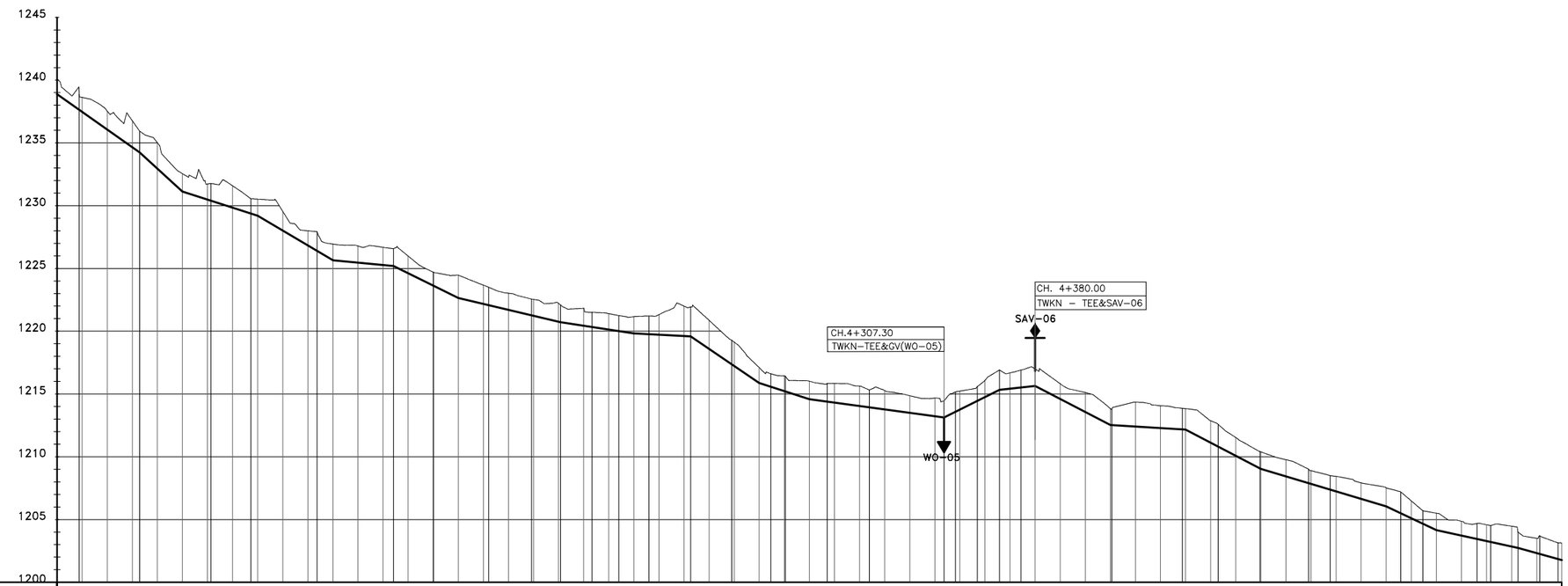

DATUM (m)

TYPE OF PIPE AND SIZE: DN110mm HDPE PIPE TO PN 16

GEOLOGICAL CONDITION: RED LOAM SOIL

CHAINAGE (m)	EXISTING GROUND LEVEL (m)	INVERT LEVELS (m)	DEPTH OF INVERT (m)	REFERENCE PEG NO.
3+600.00	1240.08	1238.88	1.20	
3+617.64	1238.80	1237.64	1.26	TP 98
3+620.00	1238.62	1237.47	1.15	
3+640.00	1237.54	1236.07	1.47	
3+660.00	1236.77	1234.66	2.11	
3+665.99	1235.93	1234.25	1.68	TP 99
3+680.00	1235.02	1232.96	2.06	
3+700.00	1232.55	1231.13	1.42	
3+720.00	1231.72	1230.49	1.23	
3+722.68	1231.77	1230.40	1.37	TP 100
3+740.00	1231.58	1229.85	1.74	
3+754.54	1230.55	1229.38	1.17	TP 101
3+760.00	1230.52	1229.20	1.31	
3+780.00	1229.55	1228.02	1.53	
3+800.00	1228.00	1226.83	1.17	
3+807.36	1227.92	1226.39	1.53	
3+820.00	1226.94	1225.64	1.30	
3+840.00	1226.79	1225.46	1.33	
3+860.00	1226.68	1225.27	1.41	
3+868.28	1226.58	1225.20	1.38	
3+880.00	1225.99	1224.62	1.37	
3+900.00	1224.70	1223.63	1.07	
3+900.17	1224.69	1223.62	1.07	
3+920.00	1224.46	1222.65	1.82	
3+940.00	1223.67	1222.17	1.50	
3+944.29	1223.50	1222.07	1.43	
3+960.00	1223.02	1221.70	1.32	
3+978.36	1222.56	1221.27	1.29	
3+980.00	1222.53	1221.23	1.30	
4+000.00	1222.21	1220.76	1.45	
4+001.54	1222.09	1220.72	1.37	
4+020.00	1221.82	1220.44	1.38	
4+026.70	1221.50	1220.34	1.17	
4+040.00	1221.40	1220.13	1.27	
4+047.93	1221.25	1220.01	1.24	
4+060.00	1221.16	1219.83	1.33	
4+072.04	1221.22	1219.76	1.45	
4+080.00	1221.32	1219.72	1.60	
4+100.00	1222.00	1219.62	2.38	
4+105.32	1221.93	1219.59	2.34	
4+120.00	1220.86	1218.59	2.27	
4+138.07	1219.27	1217.36	1.91	
4+140.00	1219.13	1217.23	1.90	
4+160.00	1217.09	1215.87	1.23	
4+169.24	1216.61	1215.57	1.04	
4+180.00	1216.44	1215.23	1.21	
4+180.81	1216.40	1215.20	1.20	
4+200.00	1216.02	1214.59	1.43	
4+214.20	1215.84	1214.40	1.44	
4+220.00	1215.83	1214.32	1.52	
4+240.00	1215.63	1214.05	1.58	
4+247.76	1215.53	1213.94	1.59	
4+260.00	1215.27	1213.77	1.50	
4+280.00	1214.86	1213.50	1.36	
4+300.00	1214.67	1213.23	1.44	
4+307.30	1214.45	1213.13	1.32	
4+316.48	1215.17	1213.59	1.58	
4+320.00	1215.23	1213.76	1.46	
4+333.99	1215.59	1214.46	1.12	
4+340.00	1215.59	1214.76	0.83	
4+351.51	1216.91	1215.33	1.57	
4+360.00	1216.68	1215.43	1.25	
4+368.70	1216.91	1215.52	1.39	
4+380.00	1217.00	1215.65	1.35	
4+400.00	1215.82	1214.61	1.21	
4+420.00	1215.12	1213.57	1.55	
4+440.00	1213.84	1212.52	1.32	
4+441.21	1213.80	1212.52	1.28	
4+460.00	1214.35	1212.41	1.94	
4+480.00	1214.06	1212.29	1.78	
4+497.41	1213.86	1212.19	1.67	
4+500.00	1213.83	1212.17	1.66	
4+520.00	1212.87	1211.13	1.74	
4+525.98	1212.58	1210.81	1.76	
4+540.00	1211.53	1210.08	1.45	
4+559.37	1210.41	1209.07	1.34	
4+560.00	1210.39	1209.03	1.35	
4+580.00	1209.77	1208.44	1.33	
4+598.15	1209.01	1207.89	1.11	TP 126
4+600.00	1208.89	1207.84	1.05	
4+615.45	1208.49	1207.38	1.12	
4+620.00	1208.43	1207.24	1.19	
4+640.00	1207.92	1206.64	1.28	
4+660.00	1207.51	1206.04	1.47	
4+671.67	1207.19	1205.50	1.70	TP 128
4+680.00	1206.48	1205.10	1.38	
4+689.29	1205.69	1204.67	1.03	
4+700.00	1205.50	1204.16	1.34	
4+720.00	1204.86	1203.73	1.13	TP 130
4+732.35	1204.58	1203.29	1.30	
4+740.00	1204.38	1203.22	1.16	
4+743.30	1204.47	1203.25	1.22	
4+760.00	1203.99	1202.85	1.14	
4+765.08	1203.90	1202.74	1.16	TP 131
4+780.00	1203.55	1202.33	1.22	
4+782.41	1203.69	1202.26	1.43	
4+796.99	1203.14	1201.86	1.28	
4+800.00	1203.11	1201.77	1.34	

SLOPE OF PIPE (H/V): –1:10.64, –1:14.23, –1:10.95, –1:31.08, –1:16.85, –1:108.51, –1:20.28, –1:42.42, –1:65.15, –1:195.13, –1:14.68, –1:31.28, –1:73.68, 1:20.08, 1:90.79, –1:19.21, –1:170.39, –1:19.13, –1:33.44, –1:21.27, –1:45.63, –1:30.24

REFERENCE PEG NO.: TP 98, TP 99, TP 100, TP 101, TP 102, TP 103, TP 104, TP 105, TP 106, TP 107, TP 108, TP 109, TP 110, TP 111, TP 112, TP 113, TP 114, TP 115, TP 116, TP 117, TP 118, TP 119, TP 120, TP 121, TP 122, TP 123, TP 124, TP 125, TP 126, TP 127, TP 128, TP 129, TP 130, TP 131, TP 132, TP 133, TP 134

LONGITUDINAL SECTION

0 100 200m

NOTES:

1. CONTOUR LEVELS ARE IN METERS AT TWO METER INTERVALS
2. GRID VALUES ARE IN METERS AT 200 METER INTERVALS
3. GEOLOGICAL CONDITIONS INDICATED ON DRAWING ARE FOR GENERAL GUIDANCE ONLY
4. MINIMUM PIPELINE SLOPES TO BE 1:200
5. DRAWING TO BE READ IN CONJUCTION WITH STANDARD DRAWINGS

LEGEND:

- ROAD (TARMAC)
- ROAD / TRACK (EARTH / MURRAM)
- FENCE / HEDGE
- 1480 CONTOURS
- ELECTRIC POST
- CULVERT
- GATE
- TEMPORARY STRUCTURES
- BUILDINGS
- PROPOSED TREATED WATER GRAVITY MAIN
- TP10 TRAVERSE POINT & No.
- TRIAL HOLE
- 30° HORIZONTAL BEND (H) OR VERTICAL BEND (V) WITH ANGLE INDICATED
- RIVER/STREAM
- V.J. VIKING JOHNSON
- GV GATE VALVE
- SV-01 SECTIONAL VALVE & No.
- WO-01 WASHOUT VALVE & No.
- SAV-01 AIR VALVE & No.
- WM WATER METER
- PROPOSED MASONRY CHAMBER
- PROPOSED VALVE BOX
- n PIPELINE GRADIENT WITH SLOPE DIRECTION (SLOPE MIN. OR 1 IN n)

ISSUED FOR CONSTRUCTION

REVISIONS		SIGN	DATE	APPROVED
	BY			
	CHECKED			
	BY			
	CHECKED			
	BY			
	CHECKED			
	BY			
	CHECKED			

CLIENT: THE CHIEF EXECUTIVE OFFICER
TANA WATER DEVELOPMENT AGENCY
P.O BOX 1292 - 10100,
NYERI, KENYA

CONSULTING ENGINEERS:
MANGAT I.B PATEL(MIBP) LIMITED
P.O BOX 48674,00100-GPO,
NAIROBI, KENYA
E-MAIL: mibp.nairobi@mibp.co.ke
TEL: +254-2-2710500

PROJECT TITLE:
KENYA TOWNS SUSTAINABLE WATER SUPPLY AND SANITATION PROGRAM

CONTRACT No.TWSB/ADB/003/2019-2020

CONSTRUCTION OF CHUKA AND CHOGORIA WATER SUPPLY AND SANITATION PROJECT

LOT 1: CHUKA WATER SUPPLY

DRAWING TITLE:
TREATED WATER GRAVITY MAIN KAANWA LINE EXTENSION (NTUNTUNI LINE) PLAN & LONGITUDINAL SECTION CH. 3+600.00- 4+800.00

SHEET 4 OF 7

Designed by:	P.W.K	Drawn by:	W.M.M
Checked by:	N.J.N	Approved by:	N.J.N
Scale:	H- 1:4000, V- 1:400	Date:	JUNE 2025

DRG No. M407/CK/TWKN/04 REV 1

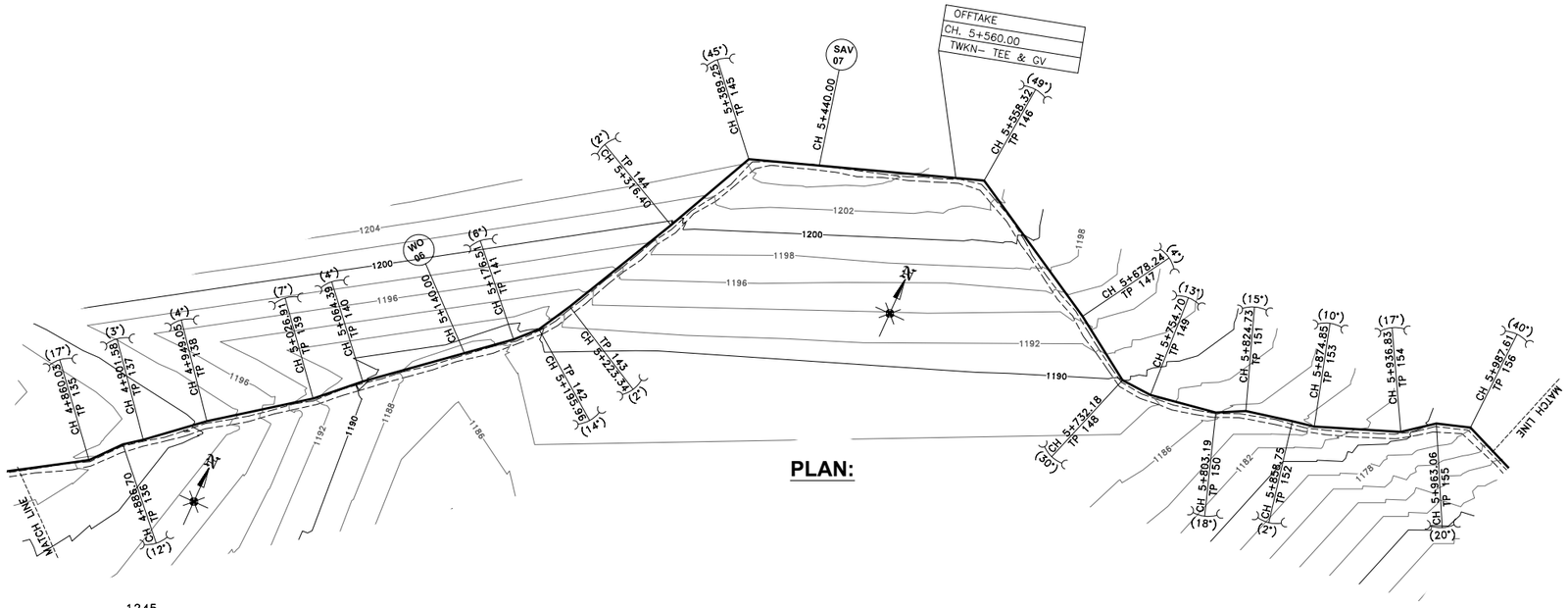

PLAN:

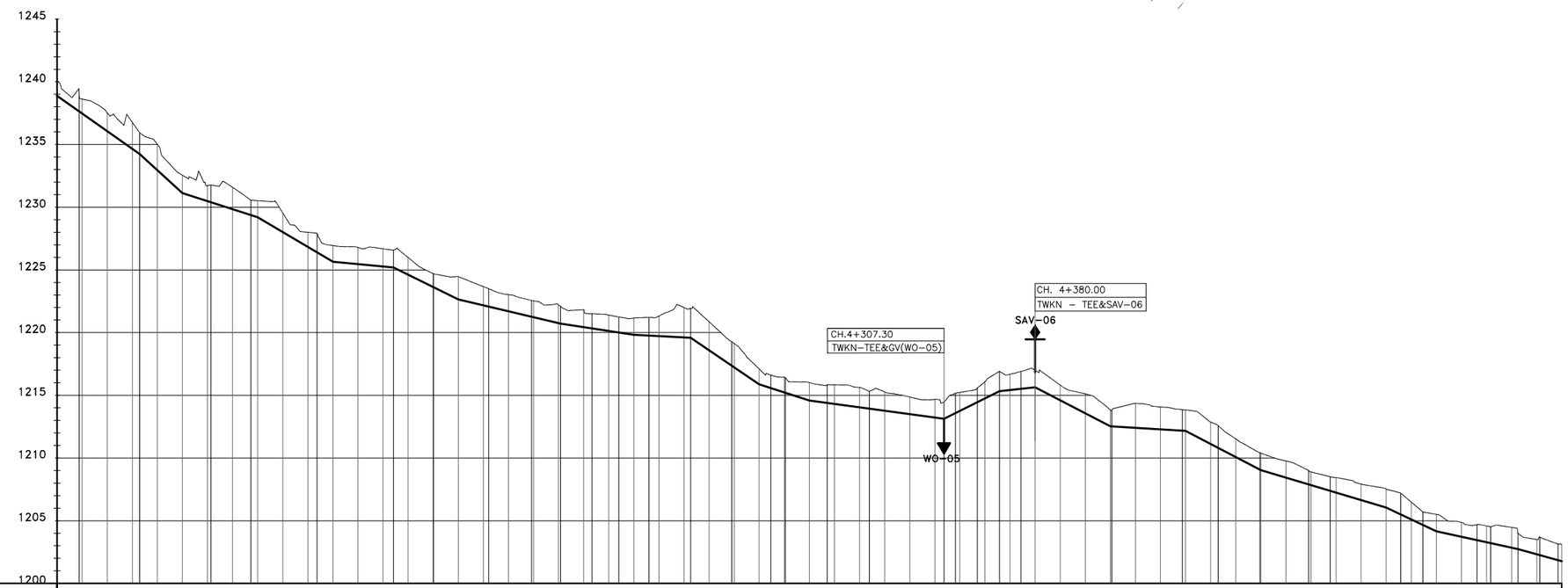

DATUM (m)

TYPE OF PIPE AND SIZE: DN110mm HDPE PIPE TO PN 16

GEOLOGICAL CONDITION: RED LOAM SOIL

CHAINAGE (m)	EXISTING GROUND LEVEL (m)	INVERT LEVELS (m)	DEPTH OF INVERT (m)	SLOPE OF PIPE (H/V)	REFERENCE PEG NO.
3+600.00	1240.08	1238.88	1.20		
3+617.64	1238.80	1237.64	1.26	-1:10.64	TP 98
3+620.00	1238.62	1237.47	1.15	-1:14.23	
3+640.00	1237.54	1236.07	1.47		
3+660.00	1236.77	1234.66	2.11		
3+665.88	1235.53	1234.25	1.28	-1:10.95	TP 99
3+680.00	1235.02	1232.96	2.06		
3+700.00	1232.55	1231.13	1.42	-1:31.08	TP 100
3+720.00	1231.72	1230.49	1.23		
3+722.68	1231.77	1230.40	1.37		
3+740.00	1231.58	1229.85	1.74		
3+754.54	1230.55	1229.38	1.17	-1:16.85	TP 101
3+760.00	1230.52	1229.20	1.31		
3+780.00	1229.55	1228.02	1.53		
3+800.00	1228.00	1226.83	1.17		TP 102
3+807.36	1227.92	1226.39	1.53		
3+820.00	1226.94	1225.64	1.30	-1:108.51	
3+840.00	1226.79	1225.46	1.33		
3+860.00	1226.68	1225.27	1.41		TP 103
3+866.28	1226.58	1225.20	1.38		
3+880.00	1225.99	1224.62	1.37	-1:20.28	
3+900.00	1224.70	1223.63	1.07		TP 104
3+900.17	1224.69	1223.62	1.07		
3+920.00	1224.46	1222.65	1.82		
3+940.00	1223.67	1222.17	1.50		TP 105
3+944.29	1223.50	1222.07	1.43	-1:42.42	
3+960.00	1223.02	1221.70	1.32		
3+978.36	1222.56	1221.27	1.29		TP 106
3+980.00	1222.53	1221.23	1.30		
4+000.00	1222.21	1220.76	1.45		TP 107
4+020.00	1221.82	1220.44	1.38	-1:65.15	TP 108
4+026.70	1221.50	1220.34	1.17		
4+040.00	1221.40	1220.13	1.27		TP 109
4+047.93	1221.25	1220.01	1.24		
4+060.00	1221.16	1219.83	1.33		TP 110
4+072.04	1221.22	1219.76	1.45	-1:195.13	
4+080.00	1221.32	1219.72	1.60		
4+100.00	1222.00	1219.62	2.38		TP 111
4+105.32	1221.93	1219.59	2.34	-1:14.68	
4+120.00	1220.86	1218.59	2.27		
4+138.07	1219.27	1217.36	1.81		TP 112
4+140.00	1219.13	1217.23	1.90		
4+160.00	1217.09	1215.87	1.23		
4+169.24	1216.61	1215.57	1.04	-1:31.28	TP 113
4+180.00	1216.44	1215.23	1.21		TP 114
4+180.81	1216.40	1215.20	1.20		
4+200.00	1216.02	1214.59	1.43		
4+214.20	1215.84	1214.40	1.44	-1:73.68	TP 115
4+220.00	1215.83	1214.32	1.52		
4+240.00	1215.63	1214.05	1.58		TP 116
4+247.76	1215.32	1213.94	1.38		
4+260.00	1215.27	1213.77	1.50		
4+280.00	1214.86	1213.50	1.36		
4+300.00	1214.67	1213.23	1.44		
4+307.30	1214.45	1213.13	1.32		
4+316.48	1215.17	1213.59	1.58		TP 117
4+320.00	1215.23	1213.76	1.46	-1:20.08	TP 118
4+333.98	1215.59	1214.46	1.12		TP 119
4+340.00	1215.69	1214.76	0.93	1:90.79	
4+351.51	1216.91	1215.33	1.57		TP 120
4+360.00	1216.68	1215.43	1.25		
4+368.70	1216.91	1215.52	1.39		TP 121
4+380.00	1217.00	1215.65	1.35	-1:19.21	
4+400.00	1215.82	1214.61	1.21		
4+420.00	1215.12	1213.57	1.55		TP 122
4+440.00	1213.84	1212.52	1.32	-1:170.39	
4+441.21	1213.80	1212.52	1.28		
4+460.00	1214.35	1212.41	1.94		
4+480.00	1214.06	1212.29	1.78		
4+497.41	1213.86	1212.19	1.67	-1:19.13	TP 123
4+500.00	1213.83	1212.17	1.66		
4+520.00	1212.87	1211.13	1.74		TP 124
4+525.98	1212.58	1210.81	1.76		
4+540.00	1211.53	1210.08	1.45		
4+559.37	1210.41	1209.07	1.34	-1:33.44	TP 125
4+560.00	1210.39	1209.03	1.35		
4+580.00	1209.77	1208.44	1.33		
4+598.15	1209.01	1207.89	1.11		TP 126
4+600.00	1208.89	1207.84	1.05		TP 127
4+615.45	1208.49	1207.38	1.12		
4+620.00	1208.43	1207.24	1.19		
4+640.00	1207.92	1206.64	1.28		
4+660.00	1207.51	1206.04	1.47	-1:21.27	TP 128
4+671.67	1207.19	1205.50	1.70		TP 129
4+680.00	1206.48	1205.10	1.38		
4+689.29	1205.69	1204.67	1.03		
4+700.00	1205.50	1204.16	1.34		
4+720.00	1204.86	1203.73	1.13	-1:45.63	TP 130
4+732.35	1204.58	1203.29	1.30		TP 131
4+740.00	1204.47	1203.22	1.25		
4+760.00	1204.52	1202.85	1.67		
4+765.08	1203.59	1202.74	0.85	-1:30.24	TP 132
4+780.00	1203.35	1202.26	1.09		TP 133
4+782.41	1203.69	1201.86	1.83		
4+798.99	1203.14	1201.77	1.37		TP 134
4+800.00	1203.11		1.34		

LONGITUDINAL SECTION

0 100 200m

NOTES:

1. CONTOUR LEVELS ARE IN METERS AT TWO METER INTERVALS
2. GRID VALUES ARE IN METERS AT 200 METER INTERVALS
3. GEOLOGICAL CONDITIONS INDICATED ON DRAWING ARE FOR GENERAL GUIDANCE ONLY
4. MINIMUM PIPELINE SLOPES TO BE 1:200
5. DRAWING TO BE READ IN CONJUCTION WITH STANDARD DRAWINGS

LEGEND:

- ROAD (TARMAC)
- ROAD / TRACK (EARTH / MURRAM)
- FENCE / HEDGE
- 1480 CONTOURS
- ELECTRIC POST
- CULVERT
- GATE
- TEMPORARY STRUCTURES
- BUILDINGS
- PROPOSED TREATED WATER GRAVITY MAIN
- TP10 TRAVERSE POINT & No.
- TRIAL HOLE
- 30° HORIZONTAL BEND (H) OR VERTICAL BEND (V) WITH ANGLE INDICATED
- RIVER/STREAM
- V.J. VIKING JOHNSON
- GV GATE VALVE
- SV-01 SECTIONAL VALVE & No.
- WO-01 WASHOUT VALVE & No.
- SAV-01 AIR VALVE & No.
- WM WATER METER
- PROPOSED MASONRY CHAMBER
- PROPOSED VALVE BOX
- n PIPELINE GRADIENT WITH SLOPE DIRECTION (SLOPE MIN. OR 1 IN n)

ISSUED FOR CONSTRUCTION

REVISIONS		SIGN	DATE	APPROVED
	BY			
	CHECKED			
	BY			
	CHECKED			
	BY			
	CHECKED			
	BY			
	CHECKED			

CLIENT: THE CHIEF EXECUTIVE OFFICER
TANA WATER DEVELOPMENT AGENCY
P.O BOX 1292 - 10100,
NYERI, KENYA

CONSULTING ENGINEERS:
MANGAT I.B PATEL(MIBP) LIMITED
P.O BOX 48674,00100-GPO,
NAIROBI, KENYA
E-MAIL: mibp.nairobi@mibp.co.ke
TEL: +254-2-2710500

PROJECT TITLE:
KENYA TOWNS SUSTAINABLE WATER SUPPLY AND SANITATION PROGRAM

CONTRACT No.TWSB/ADB/003/2019-2020

CONSTRUCTION OF CHUKA AND CHOGORIA WATER SUPPLY AND SANITATION PROJECT

LOT 1: CHUKA WATER SUPPLY

DRAWING TITLE:
TREATED WATER GRAVITY MAIN KAANWA LINE EXTENSION (NTUNTUNI LINE) PLAN & LONGITUDINAL SECTION CH. 4+800.00- 6+000.00

SHEET 5 OF 7

Designed by:	P.W.K	Drawn by:	W.M.M
Checked by:	N.J.N	Approved by:	N.J.N
Scale:	H- 1:4000, V- 1:400	Date:	JUNE 2025

DRG No. M407/CK/TWKN/05 REV 1

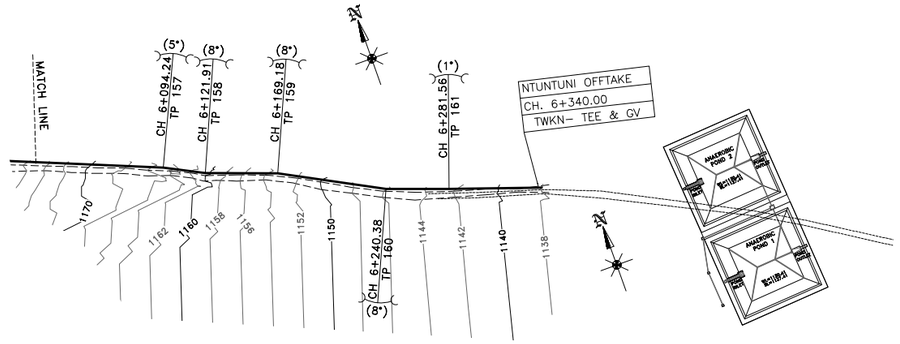

PLAN:

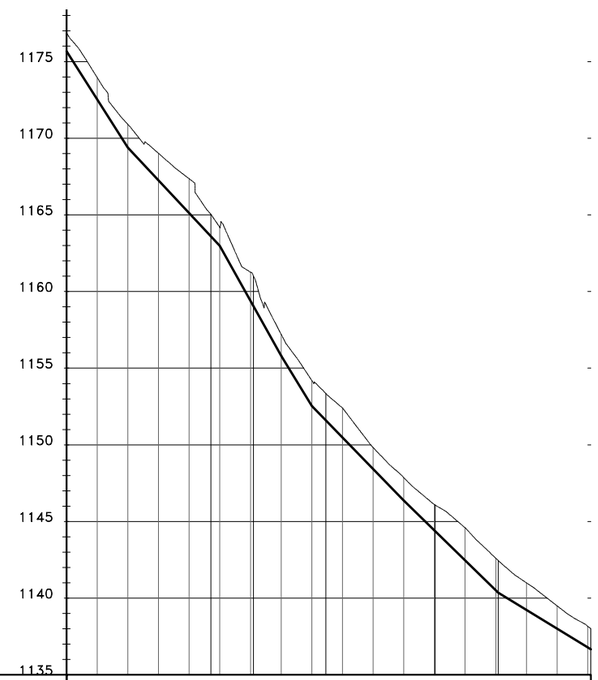

TYPE OF PIPE AND SIZE	DN110mm HDPE PIPE TO PN 16																																	
GEOLOGICAL CONDITION	RED LOAM SOIL																																	
EXISTING GROUND LEVEL (m)	1176.88	1173.96	1170.90	1169.01	1167.36	1165.03	1164.19	1162.98	1161.26	1161.01	1157.21	1154.20	1153.35	1152.41	1149.83	1147.86	1146.10	1146.08	1144.59	1142.61	1142.46	1141.00	1139.50	1138.17	1138.00									
INVERT LEVELS (m)	1175.67	1172.53	1169.38	1167.25	1165.11	1163.59	1162.98	1159.39	1159.05	1155.81	1152.53	1151.59	1150.48	1148.43	1146.37	1144.42	1144.38	1142.47	1140.51	1140.36	1139.23	1138.01	1136.79	1135.67										
CHAINAGE (m)	6+000.00	6+020.00	6+040.00	6+060.00	6+080.00	6+094.24	6+100.00	6+120.00	6+121.91	6+140.00	6+160.00	6+169.18	6+180.00	6+200.00	6+220.00	6+240.00	6+240.38	6+260.00	6+280.00	6+281.56	6+300.00	6+320.00	6+340.00	6+342.05										
DEPTH OF INVERT (m)	1.21	1.43	1.52	1.77	2.24	1.44	1.21	1.87	1.96	1.40	1.68	1.76	1.93	1.40	1.49	1.68	1.69	2.13	2.10	2.10	1.77	1.49	1.38	1.33										
SLOPE OF PIPE (H/V)	-1:16.03	-1:6.36		-1:9.57			-1:5.58		-1:8.11	-1:9.74					-1:10.24				-1:16.38															
REFERENCE PEG NO.	TP 156						TP 157		TP 158			TP 159					TP 160			TP 161														

LONGITUDINAL SECTION

0 100 200m

NOTES:

1. CONTOUR LEVELS ARE IN METERS AT TWO METER INTERVALS
2. GRID VALUES ARE IN METERS AT 200 METER INTERVALS
3. GEOLOGICAL CONDITIONS INDICATED ON DRAWING ARE FOR GENERAL GUIDANCE ONLY
4. MINIMUM PIPELINE SLOPES TO BE 1:200
5. DRAWING TO BE READ IN CONJUCTION WITH STANDARD DRAWINGS

LEGEND:

- ROAD (TARMAC)
- ROAD / TRACK (EARTH / MURRAM)
- FENCE / HEDGE
- 1480 — CONTOURS
- ELECTRIC POST
- CULVERT
- GATE
- TEMPORARY STRUCTURES
- BUILDINGS
- PROPOSED TREATED WATER GRAVITY MAIN
- TP10 — TRAVERSE POINT & No.
- TRIAL HOLE
- 30° — HORIZONTAL BEND (H) OR VERTICAL BEND (V) WITH ANGLE INDICATED
- RIVER/STREAM
- V.J. — VIKING JOHNSON
- GV — GATE VALVE
- SV-01 — SECTIONAL VALVE & No.
- WO-01 — WASHOUT VALVE & No.
- SAV-01 — AIR VALVE & No.
- WM — WATER METER
- PROPOSED MASONRY CHAMBER
- PROPOSED VALVE BOX
- n — PIPELINE GRADIENT WITH SLOPE DIRECTION (SLOPE MIN. OR 1 IN n)

ISSUED FOR CONSTRUCTION

	REVISIONS		SIGN	DATE	APPROVED
		BY			
		CHECKED			
		BY			
		CHECKED			
		BY			
		CHECKED			
		BY			
		CHECKED			

CLIENT:
THE CHIEF EXECUTIVE OFFICER
TANA WATER DEVELOPMENT AGENCY
P.O BOX 1292 - 10100,
NYERI, KENYA

CONSULTING ENGINEERS:
MANGAT I.B PATEL(MIBP) LIMITED
P.O BOX 48674,00100-GPO,
NAIROBI, KENYA
E-MAIL: mibp.nairobi@mibp.co.ke
TEL: +254-2-2710500

PROJECT TITLE:
KENYA TOWNS SUSTAINABLE WATER SUPPLY AND SANITATION PROGRAM

CONTRACT No.TWSB/ADB/003/2019-2020

CONSTRUCTION OF CHUKA AND CHOGORIA WATER SUPPLY AND SANITATION PROJECT

LOT 1: CHUKA WATER SUPPLY

DRAWING TITLE:
TREATED WATER GRAVITY MAIN
KAANWA LINE EXTENSION
(NTUNTUNI LINE)
PLAN & LONGITUDINAL SECTION
CH. 6+000.00 - 6+342.05
SHEET 6 OF 7

Designed by:	P.W.K	Drawn by:	W.M.M
Checked by:	N.J.N	Approved by:	N.J.N
Scale:	H- 1:4000, V- 1:400	Date:	JUNE 2025

DRG No. M407/CK/TWKN/06 REV 1

DETAIL

INTERCONNECTION DETAIL
CH. 0+000.00
LINE TW-KN-TEE,GV,WM

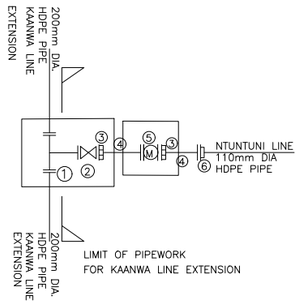

DESCRIPTION
1 No. REQUIRED

1. 1 No. 200x100mm DIA. FLANGED INVERTED TEE
2. 1 No. 100mm DIA. ALL FLANGED GATE VALVE
3. 2 Nos. 100mm DIA. FLANGED ADAPTOR
4. 2 Nos. 100mm DIA. FLANGED SPIGOT STEEL PIPE 1200mm LONG
5. 1 No. 100mm DIA. ALL FLANGED VOLUMETRIC METER
6. 1 Nos. 100mm DIA. PE FLANGE ADAPTER (STUB END) COMPLETE WITH METAL BACK UP RING

DETAIL

CH. 0+400.00, 1+440.00, 1+749.98 2+254.40, 3+310.30, 4+380.00 & 5+440.00
LINE TW-KN - TEE & SAV-01, 02, 03, 04, 05, 06 & 07

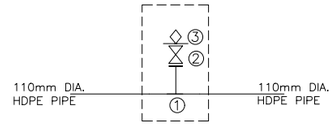

DESCRIPTION
7 Nos. REQUIRED

1. 1 Nos. 100x50mm DIA. PE INVERTED TEE WITH ONE END FLANGED
2. 1 No. 50mm DIA. FLANGED GATE VALVE
3. 1 No. 50mm DIA. SINGLE ORIFICE AIR VALVE

DETAIL

CH. 0+284.84, 1+122.77, 1+692.35, 1+180.00, 4+307.30 & 5+140.00
LINE TW-KN -TEE& GV(WO) - 01, 02, 03, 04, 05 & 06

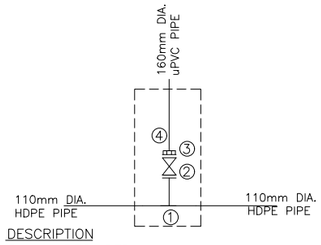

DESCRIPTION
3 Nos. REQUIRED

1. 1 No. 100x80mm DIA. PE INVERTED TEE WITH ONE END FLANGED
2. 1 No. 80mm DIA. ALL FLANGED GATE VALVE
3. 1 No. 80mm DIA. FLANGED ADAPTOR
4. 1 No. 80mm DIA. uPVC CLASS "B" PIPE (LENGTH TO SUIT ON SITE)

DETAIL

CH. 0+815.00, 3+320.00, 5+560.00, 6+340.00
TWKN-TEE & GV

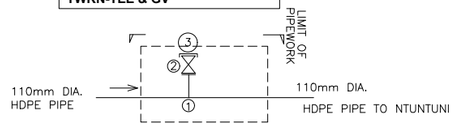

DESCRIPTION
4 No. REQUIRED

1. 1 No. 100x80mm DIA. PE INVERTED TEE WITH ONE END FLANGED
2. 1 No. 80 mm DIA. ALL FLANGED GATE VALVE
3. 1 No. 80mm DIA. BLANK FLANGE

DETAIL

CH. 6+342.05
LINE TW-KN- BLANK FLANGE

DESCRIPTION
1 No. REQUIRED

1. 1 No. 110mm DIA. PE FLANGE ADAPTOR (STUB END) COMPLETE WITH METAL BACK UP RING
2. 1 No. 100mm DIA. BLANK FLANGE

NOTES:

1. CONTOUR LEVELS ARE IN METERS AT TWO METER INTERVALS
2. GRID VALUES ARE IN METERS AT 200 METER INTERVALS
3. GEOLOGICAL CONDITIONS INDICATED ON DRAWING ARE FOR GENERAL GUIDANCE ONLY
4. MINIMUM PIPELINE SLOPES TO BE 1:200
5. DRAWING TO BE READ IN CONJUCTION WITH STANDARD DRAWINGS

LEGEND:

	ROAD (TARMAC)
	ROAD / TRACK (EARTH / MURRAM)
	FENCE / HEDGE
1480	CONTOURS
	ELECTRIC POST
	CULVERT
	GATE
	TEMPORARY STRUCTURES
	BUILDINGS
	PROPOSED TREATED WATER GRAVITY MAIN
TP10	TRAVERSE POINT & No.
	TRIAL HOLE
30°	HORIZONTAL BEND (H) OR VERTICAL BEND (V) WITH ANGLE INDICATED
	RIVER/STREAM
V.J.	VIKING JOHNSON
GV	GATE VALVE
SV-01	SECTIONAL VALVE & No.
WO-01	WASHOUT VALVE & No.
SAV-01	AIR VALVE & No.
WM	WATER METER
	PROPOSED MASONRY CHAMBER
	PROPOSED VALVE BOX
n	PIPELINE GRADIENT WITH SLOPE DIRECTION (SLOPE MIN. OR 1 IN n)

ISSUED FOR CONSTRUCTION

REVISIONS		SIGN	DATE	APPROVED
	BY			
	CHECKED			
	BY			
	CHECKED			
	BY			
	CHECKED			
	BY			
	CHECKED			

CLIENT:
THE CHIEF EXECUTIVE OFFICER
TANA WATER DEVELOPMENT AGENCY
P.O BOX 1292 - 10100,
NYERI, KENYA

CONSULTING ENGINEERS:
MANGAT I.B PATEL(MIBP) LIMITED
P.O BOX 48674,00100-GPO,
NAIROBI, KENYA
E-MAIL: mibp.nairobi@mibp.co.ke
TEL: +254-2-2710500

PROJECT TITLE:
KENYA TOWNS SUSTAINABLE WATER SUPPLY AND SANITATION PROGRAM

CONTRACT No.TWSB/ADB/003/2019-2020
CONSTRUCTION OF CHUKA AND CHOGORIA WATER SUPPLY AND SANITATION PROJECT

LOT 1: CHUKA WATER SUPPLY

DRAWING TITLE:
TREATED WATER GRAVITY MAIN KAANWA LINE EXENSION (NTUNTUNI LINE) PIPE FITTINGS SHEET 7 OF 7

Designed by:	P.W.K	Drawn by:	W.M.M
Checked by:	N.J.N	Approved by:	N.J.N
Scale:	H- 1:4000, V- 1:400	Date:	JUNE 2025

DRG No. M407/CK/TWKN/07 REV 1

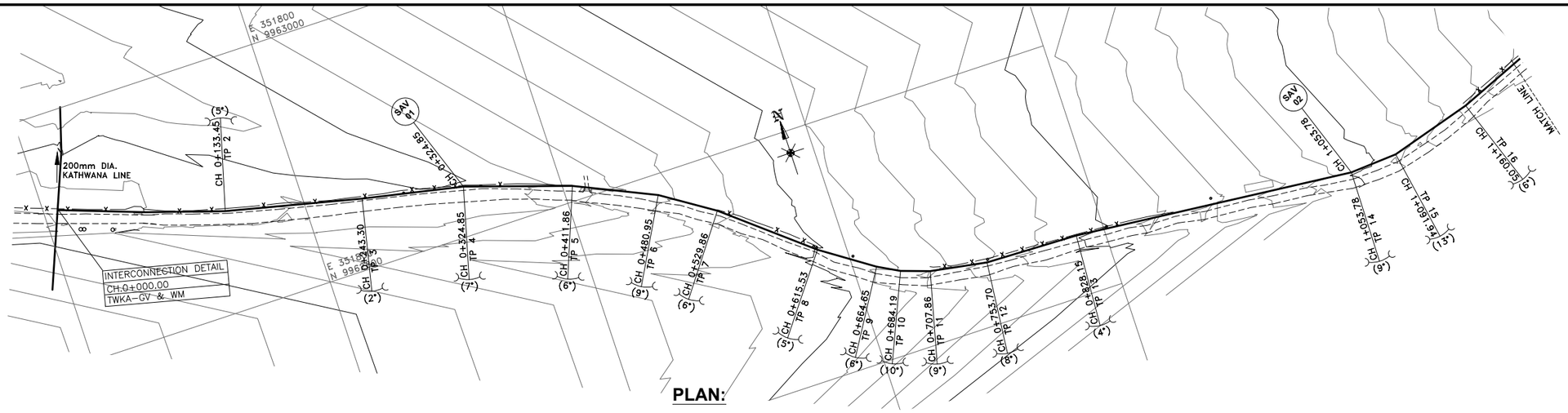

PLAN:

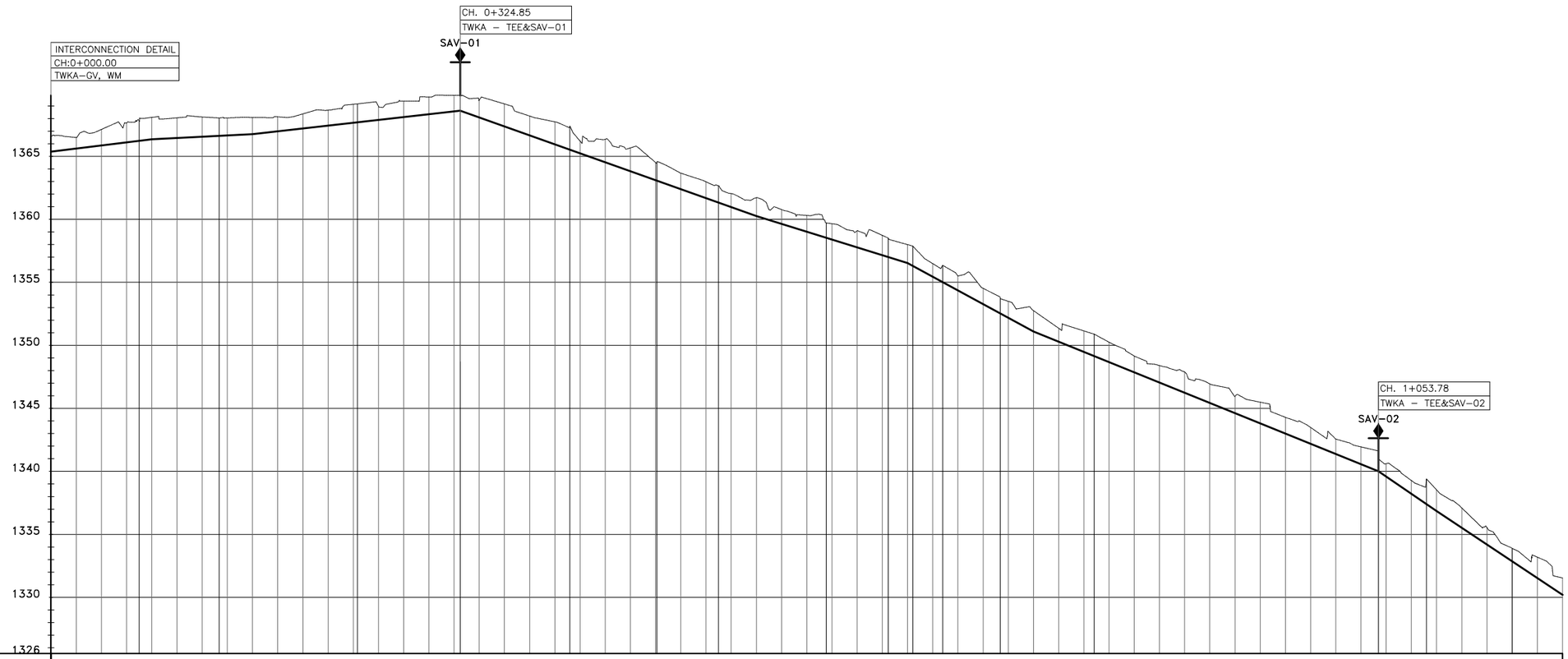

TYPE OF PIPE AND SIZE: DN200mm HDPE PIPE TO PN 16

GEOLOGICAL CONDITION: RED LOAM SOIL

CHAINAGE (m)	EXISTING GROUND LEVEL (m)	INVERT LEVELS (m)	DEPTH OF INVERT (m)
0+000.00	1366.59	1365.37	1.22
0+020.00	1366.49	1365.62	0.88
0+040.00	1367.13	1365.86	1.27
0+060.00	1367.65	1366.11	1.54
0+070.02	1367.81	1366.23	1.58
0+080.00	1368.09	1366.35	1.74
0+100.00	1368.05	1366.45	1.60
0+120.00	1368.12	1366.55	1.57
0+133.45	1368.04	1366.62	1.42
0+140.00	1368.04	1366.65	1.39
0+160.00	1368.08	1366.75	1.33
0+180.00	1368.13	1366.98	1.15
0+200.00	1368.37	1367.21	1.16
0+220.00	1368.66	1367.44	1.23
0+240.00	1369.13	1367.66	1.47
0+243.30	1369.16	1367.70	1.46
0+260.00	1368.96	1367.89	1.07
0+280.00	1369.38	1368.12	1.27
0+300.00	1369.71	1368.34	1.36
0+320.00	1369.84	1368.57	1.27
0+324.85	1369.83	1368.63	1.20
0+340.00	1369.47	1368.09	1.38
0+360.00	1369.16	1367.38	1.78
0+380.00	1368.20	1366.66	1.53
0+400.00	1367.73	1365.95	1.78
0+411.86	1367.37	1365.53	1.84
0+420.00	1366.21	1365.24	0.97
0+440.00	1366.35	1364.53	1.82
0+460.00	1365.67	1363.82	1.85
0+480.00	1364.51	1363.11	1.40
0+480.95	1364.50	1363.07	1.43
0+500.00	1363.66	1362.39	1.27
0+520.00	1362.98	1361.68	1.29
0+529.86	1362.67	1361.33	1.33
0+540.00	1362.04	1360.97	1.07
0+560.00	1361.71	1360.26	1.45
0+580.00	1360.78	1359.64	1.14
0+600.00	1360.31	1359.02	1.29
0+615.53	1359.71	1358.53	1.18
0+620.00	1359.65	1358.39	1.26
0+640.00	1359.09	1357.77	1.32
0+660.00	1358.73	1357.15	1.58
0+664.65	1358.52	1357.01	1.51
0+680.00	1357.99	1356.53	1.47
0+684.19	1357.88	1356.30	1.58
0+700.00	1356.49	1355.44	1.05
0+707.86	1356.35	1355.02	1.33
0+720.00	1355.51	1354.36	1.15
0+740.00	1354.53	1353.27	1.25
0+753.70	1353.70	1352.53	1.17
0+760.00	1353.49	1352.19	1.31
0+780.00	1352.75	1351.10	1.65
0+800.00	1351.36	1350.29	1.07
0+820.00	1351.15	1349.48	1.67
0+828.15	1350.89	1349.15	1.74
0+840.00	1350.25	1348.67	1.58
0+860.00	1349.15	1347.86	1.30
0+880.00	1348.40	1347.05	1.35
0+900.00	1347.88	1346.24	1.65
0+920.00	1346.94	1345.42	1.52
0+940.00	1345.96	1344.61	1.34
0+960.00	1345.49	1343.80	1.69
0+980.00	1344.29	1342.99	1.30
1+000.00	1343.49	1342.18	1.30
1+020.00	1342.56	1341.37	1.19
1+040.00	1341.95	1340.56	1.39
1+053.78	1341.62	1340.00	1.63
1+060.00	1340.61	1339.58	1.03
1+080.00	1339.27	1338.22	1.05
1+091.94	1339.40	1337.41	1.99
1+100.00	1338.53	1336.86	1.67
1+120.00	1337.10	1335.53	1.57
1+140.00	1335.54	1334.20	1.34
1+160.08	1333.88	1332.88	1.02
1+180.00	1333.19	1331.53	1.66
1+200.00	1331.54	1330.20	1.34

SLOPE OF PIPE (H/V): 1:81.38 | 1:199.26 | 1:88.05 | –1:28.10 | –1:32.16 | –1:18.43 | –1:24.66 | –1:14.72 | –1:15.02 | –1:23.88

REFERENCE PEG NO.: TP 1, TP 2, TP 3, TP 4, TP 5, TP 6, TP 7, TP 8, TP 9, TP 10, TP 11, TP 12, TP 13, TP 14, TP 15, TP 16

LONGITUDINAL SECTION

0 100 200m

NOTES:

1. CONTOUR LEVELS ARE IN METERS AT TWO METER INTERVALS
2. GRID VALUES ARE IN METERS AT 200 METER INTERVALS
3. GEOLOGICAL CONDITIONS INDICATED ON DRAWING ARE FOR GENERAL GUIDANCE ONLY
4. MINIMUM PIPELINE SLOPES TO BE 1:200
5. DRAWING TO BE READ IN CONJUCTION WITH STANDARD DRAWINGS

LEGEND:

- ROAD (TARMAC)
- ROAD / TRACK (EARTH / MURRAM)
- FENCE / HEDGE
- 1480 CONTOURS
- ELECTRIC POST
- CULVERT
- GATE
- TEMPORARY STRUCTURES
- BUILDINGS
- PROPOSED TREATED WATER GRAVITY MAIN
- TP10 TRAVERSE POINT & No.
- TRIAL HOLE
- 30° HORIZONTAL BEND (H) OR VERTICAL BEND (V) WITH ANGLE INDICATED
- RIVER/STREAM
- V.J. VIKING JOHNSON
- GV GATE VALVE
- SV-01 SECTIONAL VALVE & No.
- WO-01 WASHOUT VALVE & No.
- SAV-01 AIR VALVE & No.
- WM WATER METER
- PROPOSED MASONRY CHAMBER
- PROPOSED VALVE BOX
- n PIPELINE GRADIENT WITH SLOPE DIRECTION (SLOPE MIN. OR 1 IN n)

ISSUED FOR CONSTRUCTION

REVISIONS	SIGN	DATE	APPROVED
BY			
CHECKED			
BY			
CHECKED			
BY			
CHECKED			
BY			
CHECKED			

CLIENT:
THE CHIEF EXECUTIVE OFFICER
TANA WATER DEVELOPMENT AGENCY
P.O BOX 1292 - 10100,
NYERI, KENYA

CONSULTING ENGINEERS:
MANGAT I.B PATEL(MIBP) LIMITED
P.O BOX 48674,00100-GPO,
NAIROBI, KENYA
E-MAIL: mibp.nairobi@mibp.co.ke
TEL: +254-2-2710500

PROJECT TITLE:
KENYA TOWNS SUSTAINABLE WATER SUPPLY AND SANITATION PROGRAM

CONTRACT No.TWSB/ADB/003/2019-2020

CONSTRUCTION OF CHUKA AND CHOGORIA WATER SUPPLY AND SANITATION PROJECT

LOT 1: CHUKA WATER SUPPLY

DRAWING TITLE:
TREATED WATER GRAVITY MAIN KAANWA LINE EXENSION (MWANJATI LINE)
PLAN & LONGITUDINAL SECTION
CH. 0+000.00 - 1+200.00
SHEET 1 OF 7

Designed by:	A.M.I	Drawn by:	W.M.M
Checked by:	N.J.N	Approved by:	R.S.R
Scale:	H- 1:4000, V- 1:400	Date:	JUNE 2025

DRG No. M407/CK/TWKW/01 REV 1

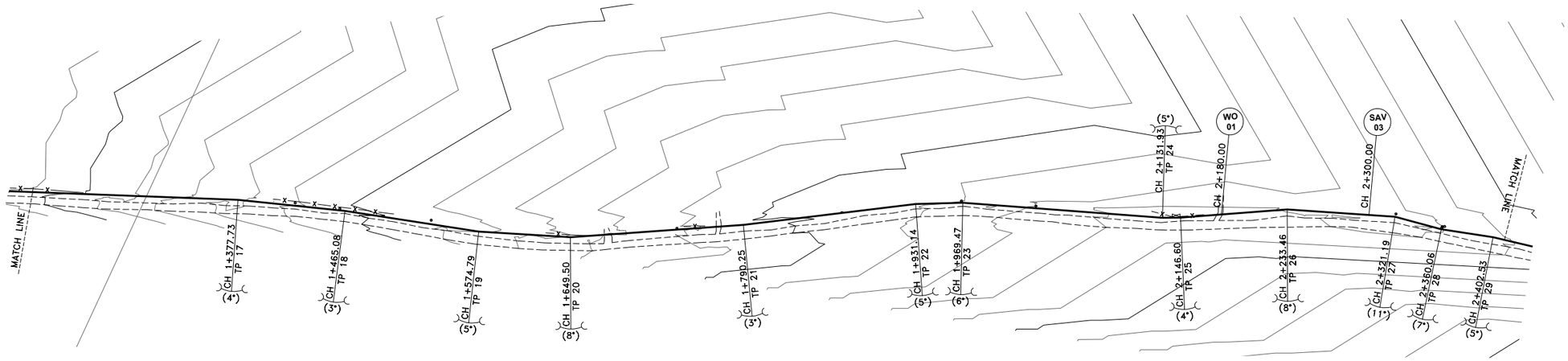

PLAN:

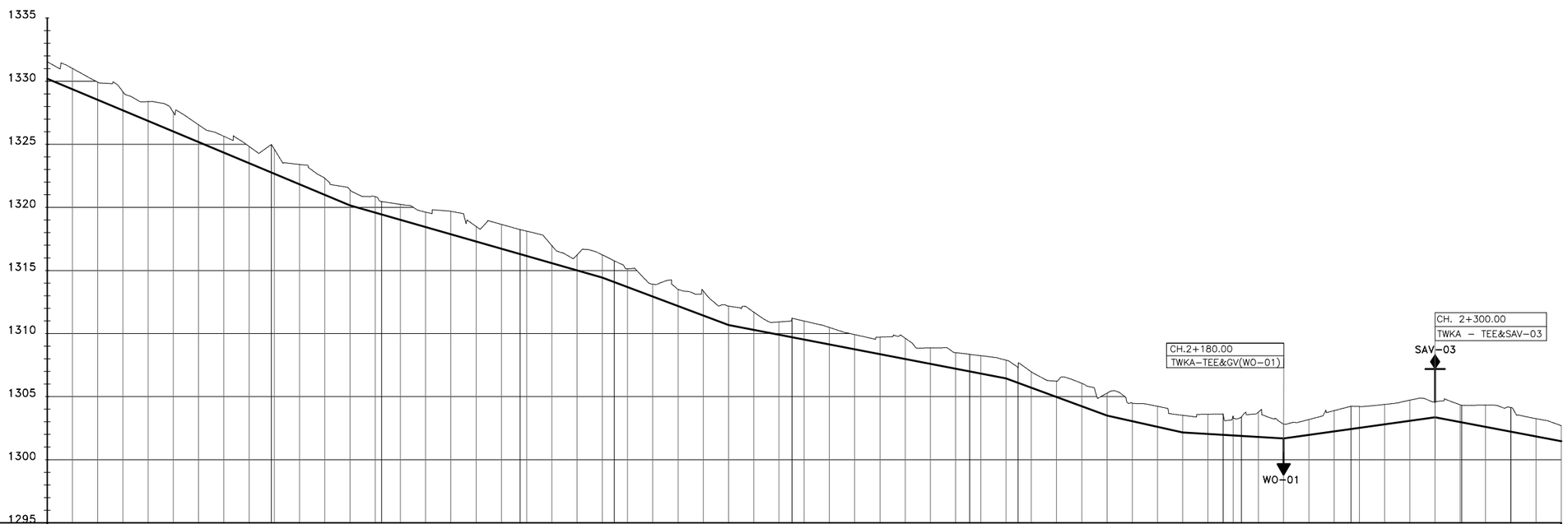

TYPE OF PIPE AND SIZE: DN200mm HDPE PIPE TO PN 16

GEOLOGICAL CONDITION: RED LOAM SOIL

EXISTING GROUND LEVEL (m)	1331.54	1331.02	1329.93	1329.17	1328.38	1327.53	1326.54	1325.64	1324.83	1324.99	1324.62	1323.40
INVERT LEVELS (m)	1330.20	1329.37	1328.53	1327.69	1326.85	1326.02	1325.18	1324.34	1323.50	1322.76	1322.67	1321.83
CHAINAGE (m)	1+200.00	1+220.00	1+240.00	1+260.00	1+280.00	1+300.00	1+320.00	1+340.00	1+360.00	1+377.73	1+380.00	1+400.00
DEPTH OF INVERT (m)	1.34	1.65	1.40	1.47	1.53	1.51	1.37	1.30	1.33	2.23	1.95	1.57
SLOPE OF PIPE (H/V)	–1:15.02	–1:23.88										
REFERENCE PEG NO.										TP 17		

EXISTING GROUND LEVEL (m)	1322.30	1321.40	1320.85	1320.46	1320.24	1319.62	1319.69	1318.49	1318.65	1318.24	1318.11	1316.97
INVERT LEVELS (m)	1320.99	1320.15	1319.58	1319.43	1319.01	1318.43	1317.86	1317.29	1316.72	1316.29	1316.14	1315.57
CHAINAGE (m)	1+420.00	1+440.00	1+460.00	1+465.08	1+480.00	1+500.00	1+520.00	1+540.00	1+560.00	1+574.79	1+580.00	1+600.00
DEPTH OF INVERT (m)	1.31	1.24	1.27	1.02	1.23	1.19	1.83	1.20	1.93	1.94	1.97	1.39
SLOPE OF PIPE (H/V)			–1:34.93									
REFERENCE PEG NO.				TP 18						TP 19		

EXISTING GROUND LEVEL (m)	1316.24	1316.24	1315.76	1315.13	1313.91	1313.50	1313.38	1312.17	1311.70	1310.92	1311.21	1310.99
INVERT LEVELS (m)	1315.00	1314.43	1314.07	1313.68	1312.93	1312.17	1311.42	1310.67	1310.29	1309.90	1309.71	1309.52
CHAINAGE (m)	1+620.00	1+640.00	1+649.50	1+660.00	1+680.00	1+700.00	1+720.00	1+740.00	1+760.00	1+780.00	1+790.25	1+800.00
DEPTH OF INVERT (m)	1.24	1.81	1.69	1.46	0.99	1.33	1.95	1.50	1.41	1.02	1.51	1.47
SLOPE OF PIPE (H/V)			–1:26.64						–1:51.96			
REFERENCE PEG NO.			TP 20								TP 21	

EXISTING GROUND LEVEL (m)	1310.48	1309.92	1309.72	1309.63	1308.86	1308.48	1308.36	1308.25	1307.89	1307.27	1306.97	1306.22
INVERT LEVELS (m)	1309.13	1308.75	1308.36	1307.98	1307.59	1307.21	1306.99	1306.82	1306.44	1306.09	1305.71	1304.97
CHAINAGE (m)	1+820.00	1+840.00	1+860.00	1+880.00	1+900.00	1+920.00	1+931.14	1+940.00	1+960.00	1+969.47	1+980.00	2+000.00
DEPTH OF INVERT (m)	1.35	1.17	1.35	1.65	1.27	1.27	1.36	1.42	1.45	1.18	1.26	1.25
SLOPE OF PIPE (H/V)										–1:27.26		
REFERENCE PEG NO.							TP 22			TP 23		

EXISTING GROUND LEVEL (m)	1306.05	1305.27	1304.48	1304.23	1303.52	1303.60	1303.62	1303.36	1303.40	1303.77	1302.82	1303.18
INVERT LEVELS (m)	1304.24	1303.50	1303.05	1302.60	1302.15	1302.04	1301.97	1301.92	1301.88	1301.81	1301.69	1301.97
CHAINAGE (m)	2+020.00	2+040.00	2+060.00	2+080.00	2+100.00	2+120.00	2+131.93	2+140.00	2+146.60	2+160.00	2+180.00	2+200.00
DEPTH OF INVERT (m)	1.82	1.77	1.43	1.63	1.36	1.56	1.65	1.44	1.52	1.97	1.13	1.21
SLOPE OF PIPE (H/V)			–1:44.43			–1:172.91						1:72.03
REFERENCE PEG NO.							TP 24		TP 25			

EXISTING GROUND LEVEL (m)	1303.89	1304.24	1304.22	1304.38	1304.72	1304.60	1304.35	1304.30	1304.33	1304.14	1304.14	1303.25	1302.69
INVERT LEVELS (m)	1302.25	1302.43	1302.52	1302.80	1303.08	1303.36	1302.98	1302.96	1302.60	1302.22	1302.22	1301.84	1301.46
CHAINAGE (m)	2+220.00	2+233.46	2+240.00	2+260.00	2+280.00	2+300.00	2+320.00	2+321.19	2+340.00	2+360.06	2+360.00	2+380.00	2+400.00
DEPTH OF INVERT (m)	1.64	1.80	1.69	1.58	1.64	1.24	1.37	1.35	1.73	1.92	1.92	1.41	1.23
SLOPE OF PIPE (H/V)							–1:52.83						–1:30.79
REFERENCE PEG NO.		TP 26						TP 27		TP 28			

LONGITUDINAL SECTION

0 100 200m

NOTES:

1. CONTOUR LEVELS ARE IN METERS AT TWO METER INTERVALS
2. GRID VALUES ARE IN METERS AT 200 METER INTERVALS
3. GEOLOGICAL CONDITIONS INDICATED ON DRAWING ARE FOR GENERAL GUIDANCE ONLY
4. MINIMUM PIPELINE SLOPES TO BE 1:200
5. DRAWING TO BE READ IN CONJUCTION WITH STANDARD DRAWINGS

LEGEND:

- - - - -	ROAD (TARMAC)
— — —	ROAD / TRACK (EARTH / MURRAM)
–x–x–x–	FENCE / HEDGE
—1480—	CONTOURS
•	ELECTRIC POST
⌶	CULVERT
—	GATE
▨	TEMPORARY STRUCTURES
☐	BUILDINGS
━━━	PROPOSED TREATED WATER GRAVITY MAIN
TP10	TRAVERSE POINT & No.
⊗	TRIAL HOLE
30°	HORIZONTAL BEND (H) OR VERTICAL BEND (V) WITH ANGLE INDICATED
═══	RIVER/STREAM
V.J.	VIKING JOHNSON
GV	GATE VALVE
SV-01	SECTIONAL VALVE & No.
WO-01	WASHOUT VALVE & No.
SAV-01	AIR VALVE & No.
WM	WATER METER
☐	PROPOSED MASONRY CHAMBER
○	PROPOSED VALVE BOX
n	PIPELINE GRADIENT WITH SLOPE DIRECTION (SLOPE MIN. OR 1 IN n)

ISSUED FOR CONSTRUCTION

REVISIONS		SIGN	DATE	APPROVED
	BY			
	CHECKED			
	BY			
	CHECKED			
	BY			
	CHECKED			
	BY			
	CHECKED			

CLIENT:
THE CHIEF EXECUTIVE OFFICER
TANA WATER DEVELOPMENT AGENCY
P.O BOX 1292 - 10100,
NYERI, KENYA

CONSULTING ENGINEERS:
MANGAT I.B PATEL(MIBP) LIMITED
P.O BOX 48674,00100-GPO,
NAIROBI, KENYA
E-MAIL: mibp.nairobi@mibp.co.ke
TEL: +254-2-2710500

PROJECT TITLE:
KENYA TOWNS SUSTAINABLE WATER SUPPLY AND SANITATION PROGRAM

CONTRACT No.TWSB/ADB/003/2019-2020

CONSTRUCTION OF CHUKA AND CHOGORIA WATER SUPPLY AND SANITATION PROJECT

LOT 1: CHUKA WATER SUPPLY

DRAWING TITLE:
TREATED WATER GRAVITY MAIN
KAANWA LINE EXENSION
(MWANJATI LINE)
PLAN & LONGITUDINAL SECTION
CH. 1+200.00 - 2+400.00
SHEET 2 OF 7

Designed by:	A.M.I	Drawn by:	W.M.M
Checked by:	N.J.N	Approved by:	R.S.R
Scale:	H- 1:4000, V- 1:400	Date:	JUNE 2025
DRG No.	M407/CK/TWKW/02		REV 1

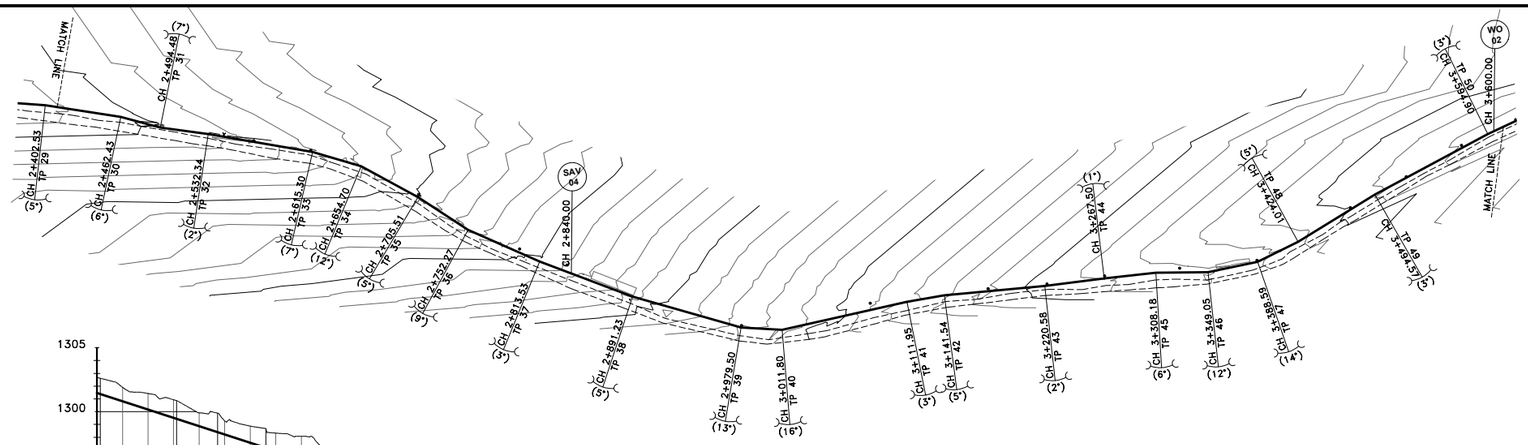

PLAN:

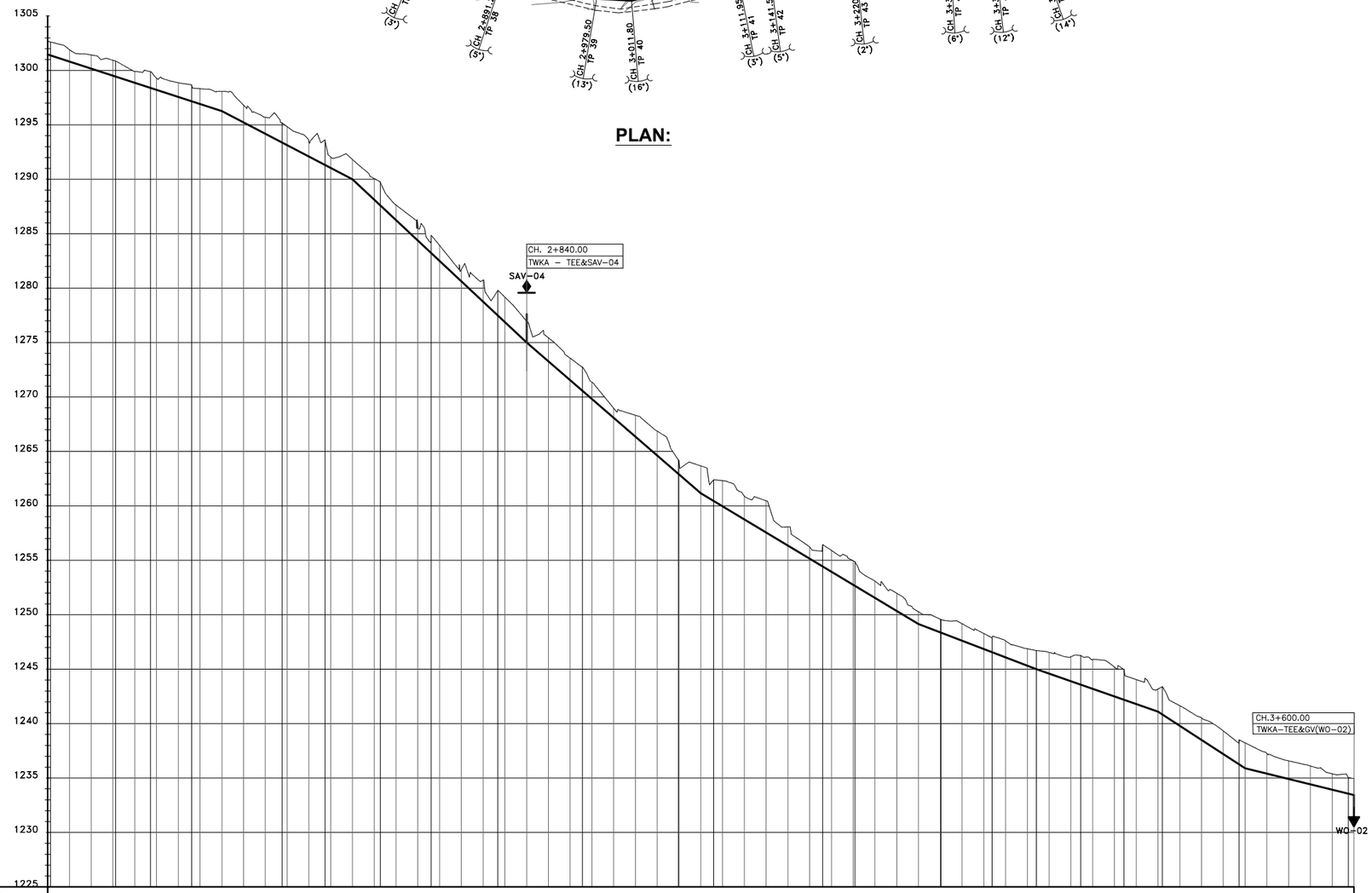

DATUM (m)

TYPE OF PIPE AND SIZE	DN200mm HDPE PIPE TO PN 16
GEOLOGICAL CONDITION	RED LOAM SOIL

CHAINAGE (m)	EXISTING GROUND LEVEL (m)	INVERT LEVELS (m)	DEPTH OF INVERT (m)	REFERENCE PEG NO.
2+400.00	1302.69	1301.46	1.23	TP 29
2+402.53	1302.61	1301.38	1.22	
2+420.00	1301.91	1300.82	1.09	
2+440.00	1301.42	1300.17	1.26	
2+460.00	1300.93	1299.52	1.41	TP 30
2+462.43	1300.86	1298.44	1.42	
2+480.00	1299.91	1298.87	1.04	
2+494.48	1299.88	1298.40	1.48	TP 31
2+500.00	1299.28	1298.22	1.06	
2+520.00	1298.87	1297.57	1.30	
2+532.34	1298.65	1297.17	1.48	TP 32
2+540.00	1298.32	1296.92	1.40	
2+560.00	1298.07	1296.27	1.80	
2+580.00	1296.80	1295.22	1.58	
2+600.00	1295.70	1294.18	1.52	
2+615.30	1295.18	1293.58	1.60	TP 33
2+620.00	1294.83	1293.13	1.70	
2+640.00	1293.48	1292.09	1.39	
2+654.70	1293.61	1291.32	2.29	TP 34
2+660.00	1292.04	1291.04	1.00	
2+680.00	1290.00	1288.18	1.82	
2+700.00	1288.12	1286.18	1.94	TP 35
2+705.51	1287.51	1286.25	1.26	
2+720.00	1286.25	1284.64	1.61	
2+740.00	1285.83	1284.38	1.46	TP 36
2+752.27	1284.31	1283.22	1.08	
2+760.00	1283.93	1282.50	1.43	
2+780.00	1281.71	1280.62	1.09	TP 37
2+800.00	1280.73	1278.75	1.98	
2+813.53	1279.78	1277.48	2.30	TP 38
2+820.00	1279.18	1276.88	2.30	
2+840.00	1276.95	1275.00	1.95	
2+860.00	1275.44	1273.27	2.17	TP 39
2+880.00	1273.56	1271.54	2.02	
2+891.23	1272.76	1270.57	2.19	TP 40
2+900.00	1271.35	1269.81	1.54	
2+920.00	1268.97	1268.08	0.89	TP 41
2+940.00	1268.32	1266.35	1.97	
2+960.00	1266.86	1264.62	2.24	TP 42
2+979.50	1264.20	1262.93	1.26	
2+980.00	1264.12	1262.89	1.23	
3+000.00	1263.67	1261.16	2.51	TP 43
3+011.80	1262.41	1260.45	1.95	
3+020.00	1262.32	1259.96	2.36	
3+040.00	1260.89	1258.76	2.13	TP 44
3+060.00	1258.67	1257.56	2.91	
3+080.00	1258.07	1256.36	1.71	TP 45
3+100.00	1256.24	1255.16	1.09	
3+111.95	1256.45	1254.44	2.01	TP 46
3+120.00	1255.91	1253.96	1.95	
3+140.00	1254.96	1252.76	2.20	TP 47
3+141.54	1254.85	1252.66	2.19	
3+160.00	1253.08	1251.56	1.53	TP 48
3+180.00	1251.97	1250.35	1.62	
3+200.00	1250.27	1249.15	1.11	TP 49
3+220.00	1249.59	1248.38	1.21	
3+220.58	1249.57	1248.36	1.20	
3+240.00	1249.18	1247.62	1.56	TP 50
3+260.00	1248.27	1246.85	1.42	
3+267.50	1248.08	1246.56	1.52	
3+280.00	1247.60	1246.08	1.52	TP 51
3+300.00	1246.87	1245.31	1.56	
3+308.18	1246.71	1245.00	1.71	
3+320.00	1246.54	1244.59	1.95	TP 52
3+340.00	1246.14	1243.89	2.25	
3+349.05	1246.26	1243.57	2.68	
3+360.00	1245.85	1243.19	2.66	TP 53
3+380.00	1245.20	1242.49	2.70	
3+388.59	1244.99	1242.20	2.79	
3+400.00	1244.05	1241.80	2.25	TP 54
3+420.00	1243.17	1241.10	2.07	
3+424.01	1243.39	1240.84	2.55	
3+440.00	1241.65	1239.80	1.85	TP 55
3+460.00	1240.53	1238.50	2.03	
3+480.00	1239.33	1237.19	2.14	TP 56
3+494.57	1238.50	1236.24	2.26	
3+500.00	1238.23	1235.89	2.34	
3+520.00	1237.26	1235.40	1.86	TP 57
3+540.00	1236.58	1234.91	1.68	
3+560.00	1236.11	1234.42	1.68	
3+580.00	1235.39	1233.93	1.45	TP 58
3+594.90	1235.03	1233.57	1.46	
3+600.00	1234.96	1233.44	1.52	TP 59

SLOPE OF PIPE (H/V): 1:52.83 – 1:30.79 – 1:19.14 – 1:10.67 – 1:11.58 – 1:18.66 – 1:26.04 – 1:28.07 – 1:15.56 – 1:40.88 – 1:118.36

LONGITUDINAL SECTION

0 100 200m

NOTES:

1. CONTOUR LEVELS ARE IN METERS AT TWO METER INTERVALS
2. GRID VALUES ARE IN METERS AT 200 METER INTERVALS
3. GEOLOGICAL CONDITIONS INDICATED ON DRAWING ARE FOR GENERAL GUIDANCE ONLY
4. MINIMUM PIPELINE SLOPES TO BE 1:200
5. DRAWING TO BE READ IN CONJUCTION WITH STANDARD DRAWINGS

LEGEND:

- ROAD (TARMAC)
- ROAD / TRACK (EARTH / MURRAM)
- FENCE / HEDGE
- 1480 CONTOURS
- ELECTRIC POST
- CULVERT
- GATE
- TEMPORARY STRUCTURES
- BUILDINGS
- PROPOSED TREATED WATER GRAVITY MAIN
- TP10 TRAVERSE POINT & No.
- TRIAL HOLE
- 30° HORIZONTAL BEND (H) OR VERTICAL BEND (V) WITH ANGLE INDICATED
- RIVER/STREAM
- V.J. VIKING JOHNSON
- GV GATE VALVE
- SV-01 SECTIONAL VALVE & No.
- WO-01 WASHOUT VALVE & No.
- SAV-01 AIR VALVE & No.
- WM WATER METER
- PROPOSED MASONRY CHAMBER
- PROPOSED VALVE BOX
- n PIPELINE GRADIENT WITH SLOPE DIRECTION (SLOPE MIN. OR 1 IN n)

ISSUED FOR CONSTRUCTION

REVISIONS		SIGN	DATE	APPROVED
	BY			
	CHECKED			
	BY			
	CHECKED			
	BY			
	CHECKED			
	BY			
	CHECKED			

CLIENT: THE CHIEF EXECUTIVE OFFICER
TANA WATER DEVELOPMENT AGENCY
P.O BOX 1292 - 10100,
NYERI, KENYA

CONSULTING ENGINEERS:
MANGAT I.B PATEL(MIBP) LIMITED
P.O BOX 48674,00100-GPO,
NAIROBI, KENYA
E-MAIL: mibp.nairobi@mibp.co.ke
TEL: +254-2-2710500

PROJECT TITLE:
KENYA TOWNS SUSTAINABLE WATER SUPPLY AND SANITATION PROGRAM

CONTRACT No.TWSB/ADB/003/2019-2020

CONSTRUCTION OF CHUKA AND CHOGORIA WATER SUPPLY AND SANITATION PROJECT

LOT 1: CHUKA WATER SUPPLY

DRAWING TITLE:
TREATED WATER GRAVITY MAIN KAANWA LINE EXENSION (MWANJATI LINE)
PLAN & LONGITUDINAL SECTION
CH. 2+400.00 - 3+600.00
SHEET 2 OF 7

Designed by:	A.M.I	Drawn by:	W.M.M
Checked by:	N.J.N	Approved by:	R.S.R
Scale:	H- 1:4000, V- 1:400	Date:	JUNE 2025
DRG No.	M407/CK/TWKW/03		REV 1

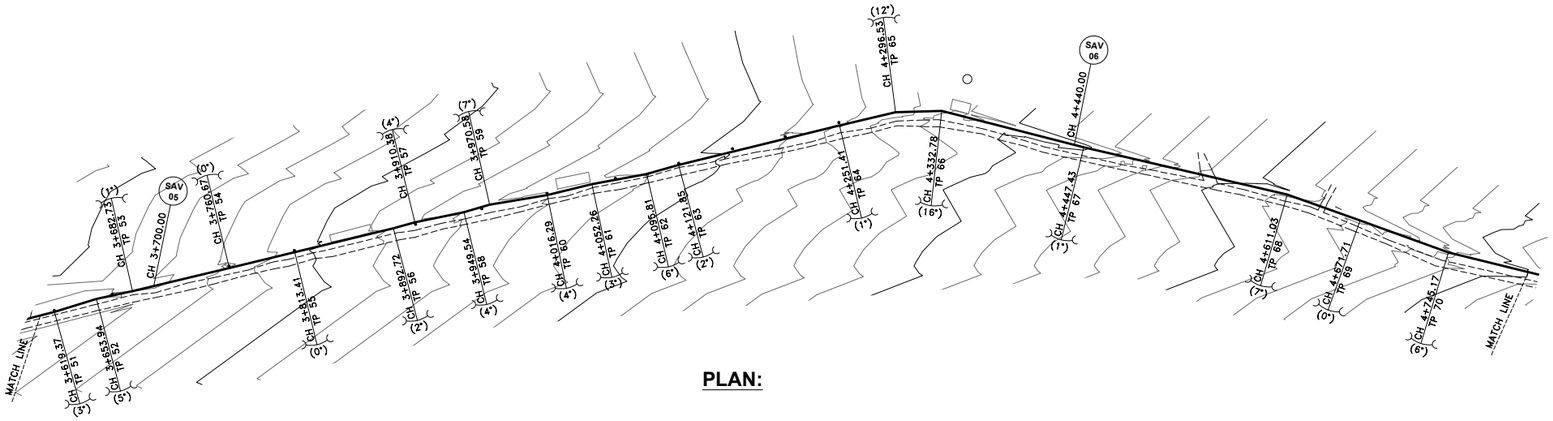

PLAN:

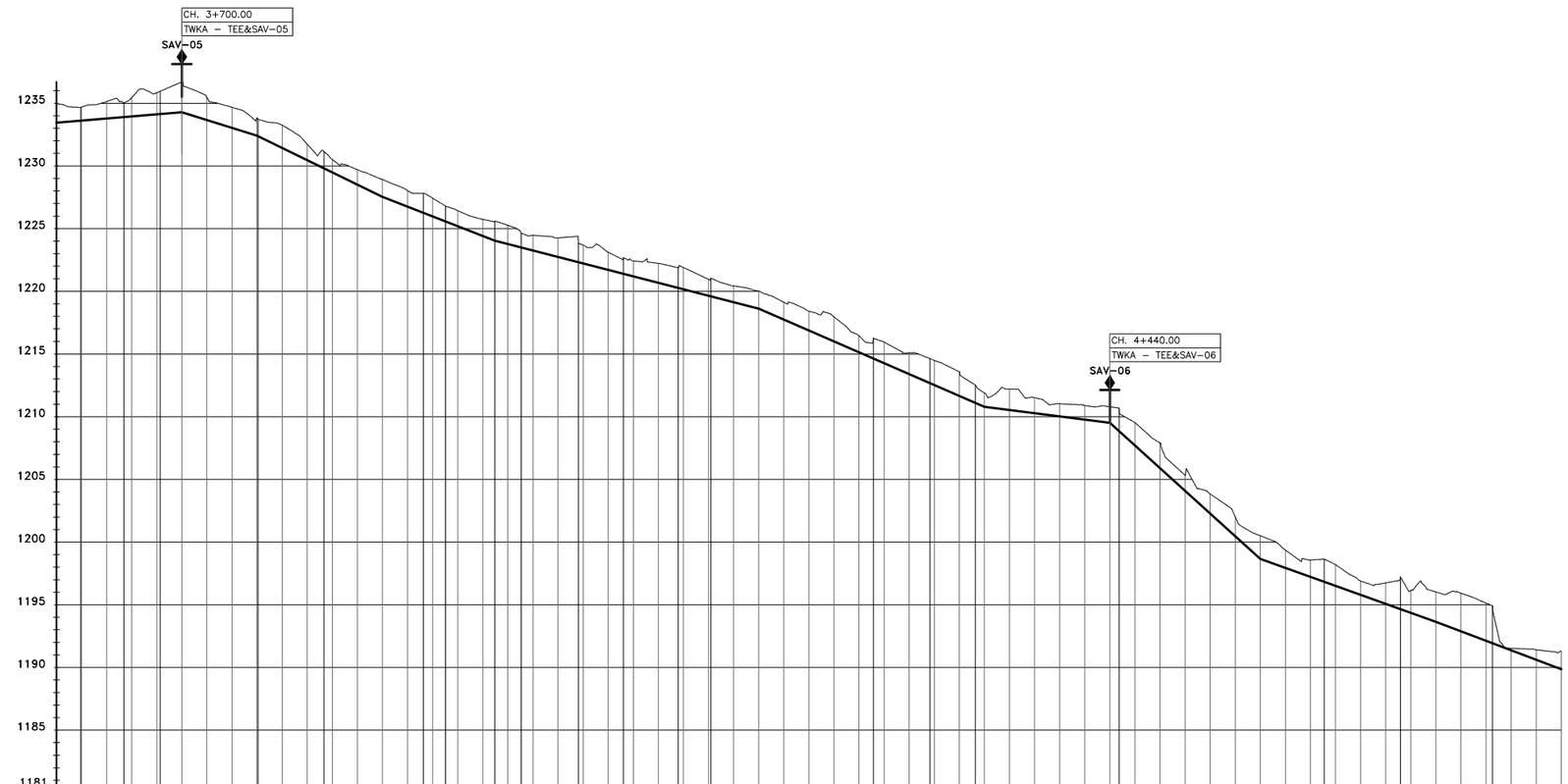

DATUM (m)

TYPE OF PIPE AND SIZE: DN200mm HDPE PIPE TO PN 16

GEOLOGICAL CONDITION: RED LOAM SOIL

CHAINAGE (m)	EXISTING GROUND LEVEL (m)	INVERT LEVELS (m)	DEPTH OF INVERT (m)	REFERENCE PEG NO.
3+600.00	1234.86	1233.44	1.52	
3+618.37	1234.67	1233.61	1.06	
3+620.00	1234.69	1233.61	1.08	
3+640.00	1235.13	1233.78	1.35	
3+651.94	1235.03	1233.80	1.23	
3+660.00	1235.44	1233.95	1.49	
3+680.00	1235.84	1234.12	1.72	
3+682.73	1235.95	1234.14	1.81	
3+700.00	1236.69	1234.29	2.40	
3+720.00	1235.47	1233.67	1.80	
3+740.00	1234.67	1233.04	1.63	
3+760.00	1233.83	1232.42	1.41	
3+760.87	1233.75	1232.39	1.36	TP 51
3+780.00	1233.25	1231.44	1.81	
3+800.00	1231.73	1230.46	1.27	
3+813.41	1231.14	1229.81	1.33	
3+820.00	1230.51	1229.49	1.03	
3+840.00	1229.70	1228.51	1.19	
3+860.00	1228.83	1227.53	1.30	
3+880.00	1228.04	1226.75	1.29	
3+892.72	1227.82	1226.25	1.57	TP 52
3+900.00	1227.43	1225.97	1.46	
3+910.38	1226.79	1225.56	1.23	
3+920.00	1226.44	1225.19	1.25	
3+940.00	1225.74	1224.40	1.34	
3+948.54	1225.54	1224.03	1.51	
3+960.00	1225.26	1223.76	1.50	
3+970.98	1224.84	1223.49	1.35	TP 53
3+980.00	1224.47	1223.25	1.22	
4+000.00	1224.26	1222.73	1.53	
4+016.29	1223.82	1222.31	1.51	TP 54
4+020.00	1223.69	1222.22	1.47	
4+040.00	1223.12	1221.70	1.42	
4+052.26	1222.69	1221.38	1.30	
4+060.00	1222.42	1221.18	1.23	
4+080.00	1222.23	1220.67	1.56	
4+095.81	1221.88	1220.26	1.61	TP 55
4+100.00	1221.69	1220.15	1.54	
4+120.00	1220.95	1219.64	1.31	
4+121.85	1221.04	1219.59	1.45	
4+140.00	1220.45	1219.12	1.33	
4+160.00	1220.02	1218.61	1.41	
4+180.00	1219.13	1217.74	1.39	
4+200.00	1218.41	1216.87	1.54	
4+220.00	1217.97	1216.00	1.97	
4+240.00	1216.45	1215.13	1.32	
4+251.41	1216.26	1214.64	1.62	TP 56
4+260.00	1215.94	1214.26	1.68	
4+280.00	1215.09	1213.39	1.70	
4+296.53	1214.63	1212.68	1.95	TP 57
4+300.00	1214.49	1212.53	1.96	
4+320.00	1213.58	1211.66	1.92	
4+332.78	1212.52	1211.10	1.42	
4+340.00	1212.20	1210.79	1.10	TP 58
4+360.00	1211.89	1210.53	1.37	
4+380.00	1211.51	1210.27	1.24	
4+400.00	1211.04	1210.02	1.02	
4+420.00	1210.89	1209.76	1.13	
4+440.00	1210.79	1209.50	1.29	TP 59
4+447.43	1210.69	1208.83	1.86	
4+460.00	1209.53	1207.70	1.84	
4+480.00	1207.91	1205.89	2.02	
4+500.00	1205.33	1204.08	1.24	
4+520.00	1203.83	1202.28	1.56	
4+540.00	1202.01	1200.47	1.53	
4+560.00	1200.50	1198.66	1.83	
4+580.00	1199.36	1197.95	1.42	
4+600.00	1198.57	1197.23	1.34	TP 60
4+611.03	1198.64	1196.83	1.81	
4+620.00	1198.20	1196.51	1.69	
4+640.00	1196.88	1195.79	1.10	
4+660.00	1196.74	1195.07	1.67	
4+671.71	1197.23	1194.65	2.58	TP 61
4+680.00	1196.12	1194.35	1.77	
4+700.00	1196.02	1193.63	2.39	
4+720.00	1195.92	1192.88	3.05	TP 62
4+740.00	1195.13	1192.12	3.01	
4+745.17	1194.92	1191.93	2.99	TP 63
4+760.00	1191.37	1191.53	0.16	
4+780.00	1191.40	1190.62	0.79	
4+800.00	1191.27	1189.86	1.41	

SLOPE OF PIPE (H/V): 1:40.88 | 1:118.36 | 1:32.11 | 1:20.44 | 1:25.61 | 1:38.79 | 1:23.02 | 1:77.67 | 1:11.07 | 1:27.82 | 1:26.52 | 1:7.88

LONGITUDINAL SECTION

0 100 200m

NOTES:

1. CONTOUR LEVELS ARE IN METERS AT TWO METER INTERVALS
2. GRID VALUES ARE IN METERS AT 200 METER INTERVALS
3. GEOLOGICAL CONDITIONS INDICATED ON DRAWING ARE FOR GENERAL GUIDANCE ONLY
4. MINIMUM PIPELINE SLOPES TO BE 1:200
5. DRAWING TO BE READ IN CONJUCTION WITH STANDARD DRAWINGS

LEGEND:

- ROAD (TARMAC)
- ROAD / TRACK (EARTH / MURRAM)
- FENCE / HEDGE
- 1480 CONTOURS
- ELECTRIC POST
- CULVERT
- GATE
- TEMPORARY STRUCTURES
- BUILDINGS
- PROPOSED TREATED WATER GRAVITY MAIN
- TP10 TRAVERSE POINT & No.
- TRIAL HOLE
- 30° HORIZONTAL BEND (H) OR VERTICAL BEND (V) WITH ANGLE INDICATED
- RIVER/STREAM
- V.J. VIKING JOHNSON
- GV GATE VALVE
- SV-01 SECTIONAL VALVE & No.
- WO-01 WASHOUT VALVE & No.
- SAV-01 AIR VALVE & No.
- WM WATER METER
- PROPOSED MASONRY CHAMBER
- PROPOSED VALVE BOX
- n PIPELINE GRADIENT WITH SLOPE DIRECTION (SLOPE MIN. OR 1 IN n)

ISSUED FOR CONSTRUCTION

REVISIONS	SIGN	DATE	APPROVED
BY			
CHECKED			
BY			
CHECKED			
BY			
CHECKED			
BY			
CHECKED			

CLIENT:
THE CHIEF EXECUTIVE OFFICER
TANA WATER DEVELOPMENT AGENCY
P.O BOX 1292 - 10100,
NYERI, KENYA

CONSULTING ENGINEERS:
MANGAT I.B PATEL(MIBP) LIMITED
P.O BOX 48674,00100-GPO,
NAIROBI, KENYA
E-MAIL: mibp.nairobi@mibp.co.ke
TEL: +254-2-2710500

PROJECT TITLE:
KENYA TOWNS SUSTAINABLE WATER SUPPLY AND SANITATION PROGRAM

CONTRACT No.TWSB/ADB/003/2019-2020
CONSTRUCTION OF CHUKA AND CHOGORIA WATER SUPPLY AND SANITATION PROJECT

LOT 1: CHUKA WATER SUPPLY

DRAWING TITLE:
TREATED WATER GRAVITY MAIN
KAANWA LINE EXENSION
(MWANJATI LINE)
PLAN & LONGITUDINAL SECTION
CH. 3+600.00 - 4+800.00
SHEET 4 OF 7

Designed by:	A.M.I	Drawn by:	W.M.M
Checked by:	N.J.N	Approved by:	R.S.R
Scale:	H- 1:4000, V- 1:400	Date:	JUNE 2025

DRG No. M407/CK/TWKW/04 REV 1

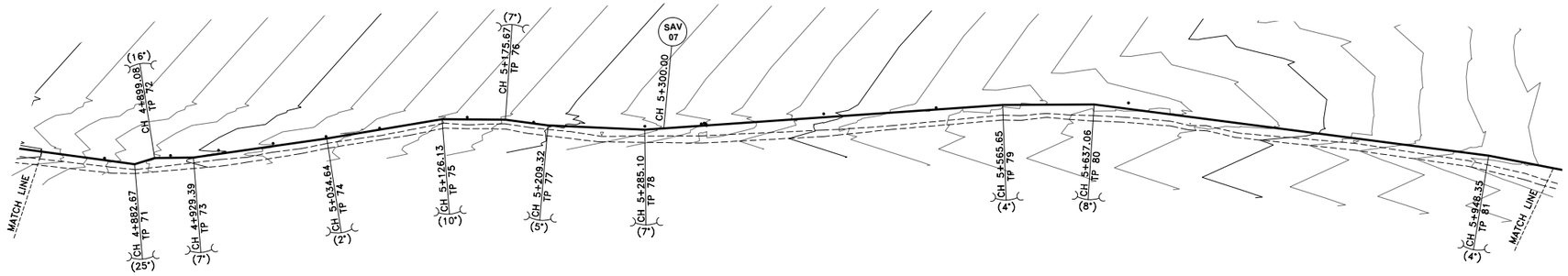

PLAN:

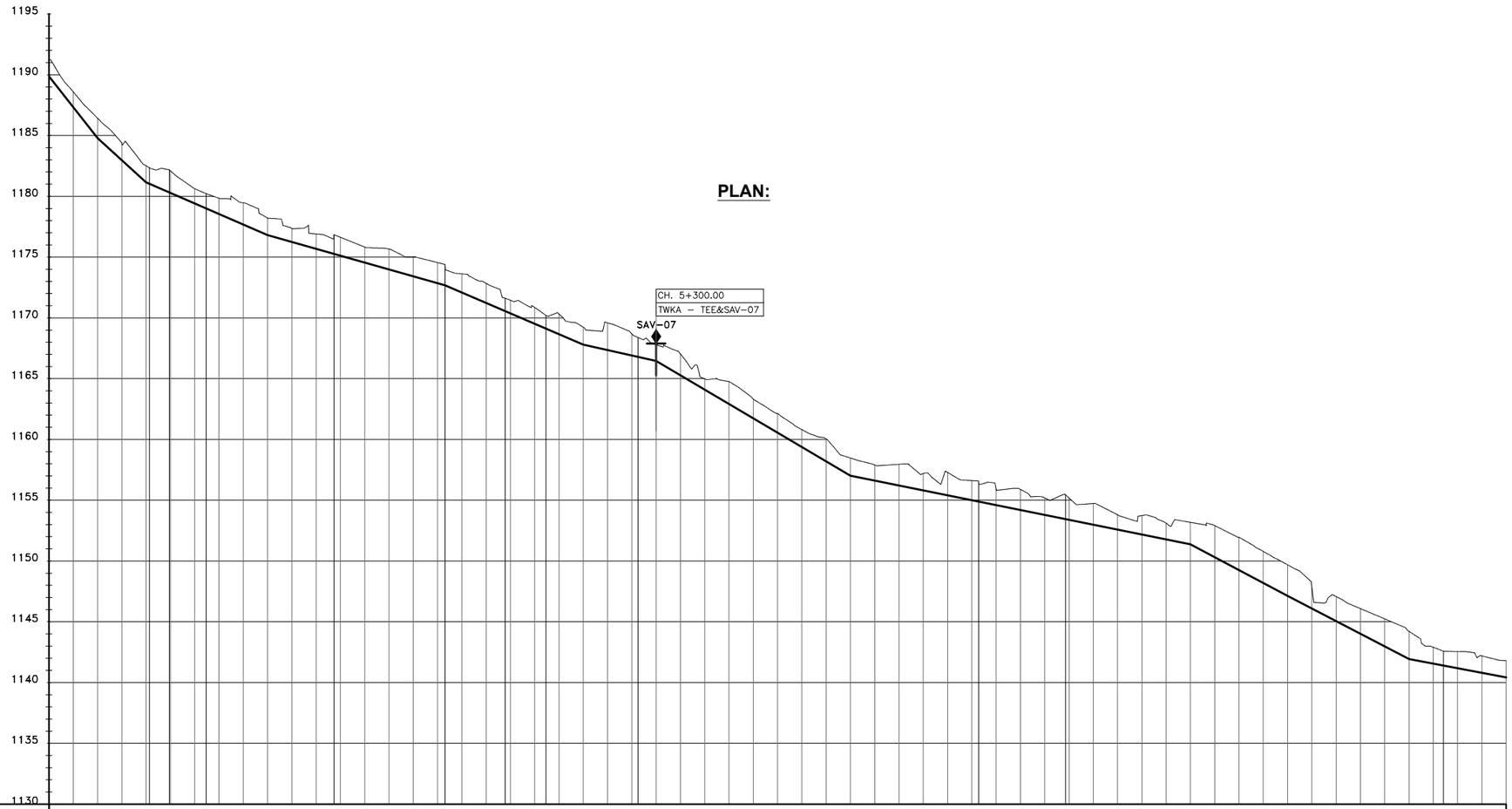

DATUM (m)

TYPE OF PIPE AND SIZE: DN200mm HDPE PIPE TO PN 16

GEOLOGICAL CONDITION: RED LOAM SOIL

CHAINAGE (m)	EXISTING GROUND LEVEL (m)	INVERT LEVELS (m)	DEPTH OF INVERT (m)
4+800.00	1191.27	1189.86	1.41
4+820.00	1188.59	1187.32	1.27
4+840.00	1186.43	1184.79	1.64
4+860.00	1184.38	1182.97	1.40
4+880.00	1182.52	1181.16	1.36
4+882.67	1182.35	1181.04	1.30
4+893.08	1182.18	1180.33	1.85
4+900.00	1182.10	1180.29	1.81
4+920.00	1180.63	1179.42	1.20
4+929.39	1180.22	1179.02	1.21
4+940.00	1179.85	1178.56	1.29
4+960.00	1179.47	1177.69	1.78
4+980.00	1178.21	1176.82	1.38
5+000.00	1177.36	1176.25	1.10
5+020.00	1176.90	1175.69	1.22
5+034.64	1176.85	1175.27	1.58
5+040.00	1176.83	1175.12	1.51
5+060.00	1175.83	1174.55	1.28
5+080.00	1175.66	1173.99	1.68
5+100.00	1175.01	1173.42	1.59
5+120.00	1174.55	1172.85	1.70
5+126.13	1174.40	1172.68	1.72
5+140.00	1173.62	1172.09	1.54
5+160.00	1172.84	1171.23	1.61
5+175.67	1171.62	1170.56	1.07
5+180.00	1171.45	1170.37	1.08
5+200.00	1170.86	1169.52	1.34
5+209.32	1170.20	1169.12	1.08
5+220.00	1170.32	1168.66	1.66
5+240.00	1169.23	1167.80	1.43
5+260.00	1169.59	1167.36	2.23
5+280.00	1168.68	1166.91	1.77
5+285.10	1168.39	1166.80	1.59
5+300.00	1167.78	1166.47	1.32
5+320.00	1167.04	1165.28	1.75
5+340.00	1164.99	1164.10	0.89
5+360.00	1164.76	1162.92	1.84
5+380.00	1163.33	1161.74	1.59
5+400.00	1162.14	1160.56	1.58
5+420.00	1160.81	1159.38	1.43
5+440.00	1160.04	1158.19	1.85
5+460.00	1158.47	1157.01	1.46
5+480.00	1157.90	1156.61	1.29
5+500.00	1157.96	1156.21	1.75
5+520.00	1157.20	1155.80	1.40
5+540.00	1157.29	1155.40	1.89
5+560.00	1156.61	1155.00	1.61
5+565.65	1156.45	1154.88	1.57
5+580.00	1155.88	1154.60	1.29
5+600.00	1155.89	1154.19	1.70
5+620.00	1155.19	1153.79	1.40
5+637.06	1155.46	1153.45	2.01
5+640.00	1155.19	1153.39	1.80
5+660.00	1154.73	1152.99	1.74
5+680.00	1153.81	1152.58	1.22
5+700.00	1153.74	1152.18	1.56
5+720.00	1153.12	1151.78	1.34
5+740.00	1153.18	1151.37	1.81
5+760.00	1152.91	1150.31	2.60
5+780.00	1151.95	1149.25	2.70
5+800.00	1150.79	1148.19	2.60
5+820.00	1149.69	1147.12	2.56
5+840.00	1147.77	1146.09	1.68
5+860.00	1147.07	1145.05	2.03
5+880.00	1146.08	1144.01	2.07
5+900.00	1145.24	1142.97	2.27
5+920.00	1144.21	1141.93	2.28
5+940.00	1142.91	1141.56	1.35
5+948.35	1142.58	1141.40	1.18
5+960.00	1142.55	1141.18	1.37
5+980.00	1142.19	1140.81	1.39
6+000.00	1141.81	1140.43	1.38

SLOPE OF PIPE (H/V): –1:26.52 | –7:88 | –1:11.02 | –1:23.07 | –1:35.28 | –1:23.36 | –1:44.83 | –1:16.93 | –1:49.66 | –1:18.62 | –1:19.25 | –1:53.56 | –1:40.81

REFERENCE PEG NO.: TP 71, TP 72, TP 73, TP 74, TP 75, TP 76, TP 77, TP 78, TP 79, TP 80, TP 81

LONGITUDINAL SECTION

0 100 200m

NOTES:

1. CONTOUR LEVELS ARE IN METERS AT TWO METER INTERVALS
2. GRID VALUES ARE IN METERS AT 200 METER INTERVALS
3. GEOLOGICAL CONDITIONS INDICATED ON DRAWING ARE FOR GENERAL GUIDANCE ONLY
4. MINIMUM PIPELINE SLOPES TO BE 1:200
5. DRAWING TO BE READ IN CONJUCTION WITH STANDARD DRAWINGS

LEGEND:

- ROAD (TARMAC)
- ROAD / TRACK (EARTH / MURRAM)
- FENCE / HEDGE
- 1480 CONTOURS
- ELECTRIC POST
- CULVERT
- GATE
- TEMPORARY STRUCTURES
- BUILDINGS
- PROPOSED TREATED WATER GRAVITY MAIN
- TP10 TRAVERSE POINT & No.
- TRIAL HOLE
- 30° HORIZONTAL BEND (H) OR VERTICAL BEND (V) WITH ANGLE INDICATED
- RIVER/STREAM
- V.J. VIKING JOHNSON
- GV GATE VALVE
- SV-01 SECTIONAL VALVE & No.
- WO-01 WASHOUT VALVE & No.
- SAV-01 AIR VALVE & No.
- WM WATER METER
- PROPOSED MASONRY CHAMBER
- PROPOSED VALVE BOX
- n PIPELINE GRADIENT WITH SLOPE DIRECTION (SLOPE MIN. OR 1 IN n)

ISSUED FOR CONSTRUCTION

REVISIONS	SIGN	DATE	APPROVED
BY			
CHECKED			
BY			
CHECKED			
BY			
CHECKED			
BY			
CHECKED			

CLIENT: **THE CHIEF EXECUTIVE OFFICER TANA WATER DEVELOPMENT AGENCY**
P.O BOX 1292 - 10100,
NYERI, KENYA

CONSULTING ENGINEERS:
MANGAT I.B PATEL(MIBP) LIMITED
P.O BOX 48674,00100-GPO,
NAIROBI, KENYA
E-MAIL: mibp.nairobi@mibp.co.ke
TEL: +254-2-2710500

PROJECT TITLE:
KENYA TOWNS SUSTAINABLE WATER SUPPLY AND SANITATION PROGRAM

CONTRACT No.TWSB/ADB/003/2019-2020

CONSTRUCTION OF CHUKA AND CHOGORIA WATER SUPPLY AND SANITATION PROJECT

LOT 1: CHUKA WATER SUPPLY

DRAWING TITLE:
TREATED WATER GRAVITY MAIN KAANWA LINE EXENSION (MWANJATI LINE) PLAN & LONGITUDINAL SECTION CH. 4+800.00 - 6+000.00 SHEET 5 OF 7

Designed by:	A.M.I	Drawn by:	W.M.M
Checked by:	N.J.N	Approved by:	R.S.R
Scale:	H- 1:4000, V- 1:400	Date:	JUNE 2025
DRG No.	M407/CK/TWKW/05		REV 1

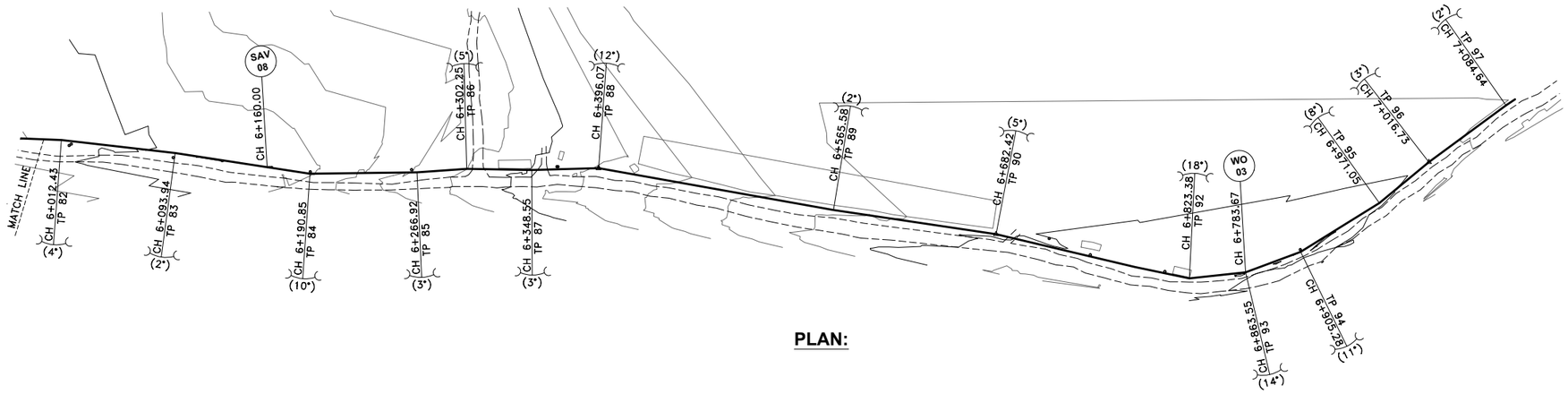

PLAN:

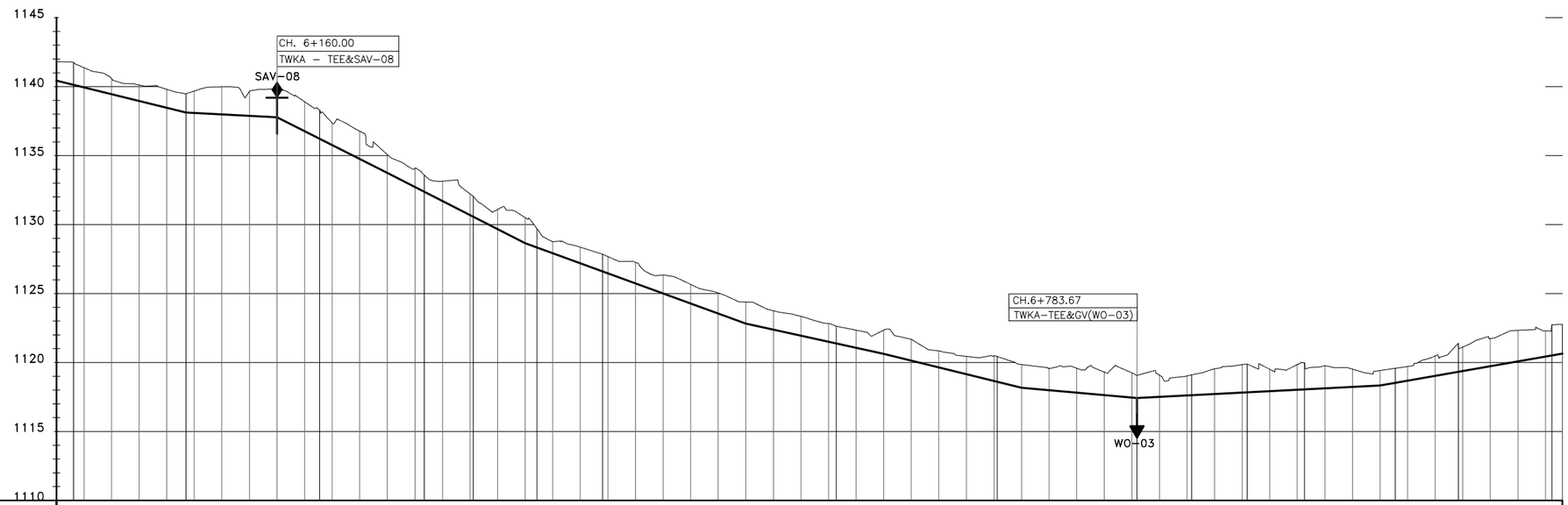

DATUM (m)

TYPE OF PIPE AND SIZE: DN200mm HDPE PIPE TO PN 16

GEOLOGICAL CONDITION: RED LOAM SOIL

CHAINAGE (m)	EXISTING GROUND LEVEL (m)	INVERT LEVELS (m)	DEPTH OF INVERT (m)
6+000.00	1141.81	1140.43	1.38
6+012.43	1141.76	1140.13	1.63
6+020.00	1141.37	1139.94	1.43
6+040.00	1140.58	1139.45	1.13
6+060.00	1140.12	1138.96	1.16
6+080.00	1139.80	1138.47	1.33
6+093.94	1139.48	1138.13	1.35
6+100.00	1139.68	1138.10	1.58
6+120.00	1139.98	1137.99	1.99
6+140.00	1139.68	1137.88	1.79
6+160.00	1139.91	1137.78	2.13
6+180.00	1138.91	1136.77	2.14
6+190.85	1138.28	1136.22	2.06
6+200.00	1137.37	1135.76	1.61
6+220.00	1136.77	1134.76	2.01
6+240.00	1135.08	1133.75	1.33
6+260.00	1134.08	1132.73	1.35
6+266.92	1133.57	1132.38	1.19
6+280.00	1133.14	1131.71	1.43
6+300.00	1132.23	1130.69	1.53
6+302.25	1132.06	1130.58	1.48
6+320.00	1131.09	1129.68	1.42
6+340.00	1130.50	1128.66	1.85
6+348.55	1129.70	1128.35	1.35
6+360.00	1128.76	1127.93	0.83
6+380.00	1128.36	1127.20	1.16
6+396.07	1127.85	1126.61	1.24
6+400.00	1127.68	1126.47	1.21
6+420.00	1127.26	1125.74	1.52
6+440.00	1126.34	1125.01	1.33
6+460.00	1125.66	1124.28	1.38
6+480.00	1125.04	1123.55	1.49
6+500.00	1124.38	1122.83	1.56
6+520.00	1123.75	1122.39	1.37
6+540.00	1123.34	1121.95	1.40
6+560.00	1122.82	1121.51	1.32
6+565.58	1122.63	1121.38	1.25
6+580.00	1122.35	1121.07	1.28
6+600.00	1122.35	1120.63	1.72
6+620.00	1121.68	1120.13	1.54
6+640.00	1120.84	1119.64	1.20
6+660.00	1120.44	1119.15	1.29
6+680.00	1120.48	1118.65	1.82
6+682.42	1120.43	1118.59	1.84
6+700.00	1119.85	1118.16	1.69
6+720.00	1119.56	1117.98	1.58
6+740.00	1119.58	1117.81	1.78
6+760.00	1119.30	1117.63	1.67
6+780.00	1119.25	1117.45	1.80
6+783.67	1119.06	1117.42	1.64
6+800.00	1119.08	1117.51	1.58
6+820.00	1119.03	1117.61	1.42
6+823.38	1119.11	1117.63	1.48
6+840.00	1119.54	1117.71	1.83
6+860.00	1119.85	1117.82	2.03
6+863.55	1119.88	1117.84	2.05
6+880.00	1119.51	1117.92	1.58
6+900.00	1119.85	1118.03	1.82
6+905.28	1119.97	1118.06	1.91
6+920.00	1119.77	1118.13	1.64
6+940.00	1119.52	1118.24	1.29
6+960.00	1119.42	1118.34	1.08
6+971.05	1119.58	1118.53	1.05
6+980.00	1119.71	1118.69	1.02
7+000.00	1120.48	1119.04	1.44
7+016.73	1121.39	1119.33	2.06
7+020.00	1121.12	1119.39	1.74
7+040.00	1121.73	1119.74	2.00
7+060.00	1122.33	1120.08	2.25
7+080.00	1122.29	1120.43	1.86
7+084.64	1122.74	1120.51	2.23
7+092.32	1122.76	1120.65	2.11

SLOPE OF PIPE (H/V): –1:53.36 | –1:40.81 | –1:187.13 | –1:19.87 | –1:19.64 | –1:27.44 | –1:45.45 | –1:40.58 | –1:112.95 | 1:191.41 | 1:57.39 | –1:153.26

REFERENCE PEG NO.: TP 82, TP 83, TP 84, TP 85, TP 86, TP 87, TP 88, TP 89, TP 90, TP 91, TP 92, TP 93, TP 94, TP 95, TP 96, TP 97

LONGITUDINAL SECTION

0 100 200m

NOTES:

1. CONTOUR LEVELS ARE IN METERS AT TWO METER INTERVALS
2. GRID VALUES ARE IN METERS AT 200 METER INTERVALS
3. GEOLOGICAL CONDITIONS INDICATED ON DRAWING ARE FOR GENERAL GUIDANCE ONLY
4. MINIMUM PIPELINE SLOPES TO BE 1:200
5. DRAWING TO BE READ IN CONJUCTION WITH STANDARD DRAWINGS

LEGEND:

- ROAD (TARMAC)
- ROAD / TRACK (EARTH / MURRAM)
- FENCE / HEDGE
- 1480 CONTOURS
- ELECTRIC POST
- CULVERT
- GATE
- TEMPORARY STRUCTURES
- BUILDINGS
- PROPOSED TREATED WATER GRAVITY MAIN
- TP10 TRAVERSE POINT & No.
- TRIAL HOLE
- 30° HORIZONTAL BEND (H) OR VERTICAL BEND (V) WITH ANGLE INDICATED
- RIVER/STREAM
- V.J. VIKING JOHNSON
- GV GATE VALVE
- SV-01 SECTIONAL VALVE & No.
- WO-01 WASHOUT VALVE & No.
- SAV-01 AIR VALVE & No.
- WM WATER METER
- PROPOSED MASONRY CHAMBER
- PROPOSED VALVE BOX
- n PIPELINE GRADIENT WITH SLOPE DIRECTION (SLOPE MIN. OR 1 IN n)

ISSUED FOR CONSTRUCTION

REVISIONS		SIGN	DATE	APPROVED
	BY			
	CHECKED			
	BY			
	CHECKED			
	BY			
	CHECKED			
	BY			
	CHECKED			

CLIENT: THE CHIEF EXECUTIVE OFFICER
TANA WATER DEVELOPMENT AGENCY
P.O BOX 1292 - 10100,
NYERI, KENYA

CONSULTING ENGINEERS:
MANGAT I.B PATEL(MIBP) LIMITED
P.O BOX 48674,00100-GPO,
NAIROBI, KENYA
E-MAIL: mibp.nairobi@mibp.co.ke
TEL: +254-2-2710500

PROJECT TITLE:
KENYA TOWNS SUSTAINABLE WATER SUPPLY AND SANITATION PROGRAM

CONTRACT No.TWSB/ADB/003/2019-2020
CONSTRUCTION OF CHUKA AND CHOGORIA WATER SUPPLY AND SANITATION PROJECT

LOT 1: CHUKA WATER SUPPLY

DRAWING TITLE:
TREATED WATER GRAVITY MAIN KAANWA LINE EXENSION (MWANJATI LINE) PLAN & LONGITUDINAL SECTION CH. 6+000.00 - 7+100.00
SHEET 6OF 7

Designed by:	A.M.I	Drawn by:	W.M.M
Checked by:	N.J.N	Approved by:	R.S.R
Scale:	H- 1:4000, V- 1:400	Date:	JUNE 2025

DRG No. M407/CK/TWKW/06 REV 1

DETAIL | **INTERCONNECTION DETAIL**
CH. 0+000.00
LINE TW-KAE-TEE,GV,WM

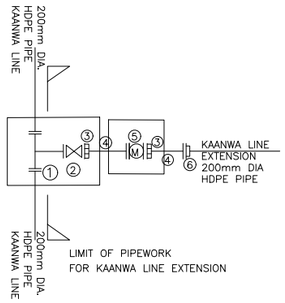

DESCRIPTION
1 No. REQUIRED

① 1 No. 200mm DIA. FLANGED EQUAL TEE
② 1 No. 200mm DIA. ALL FLANGED GATE VALVE
③ 2 Nos. 200mm DIA. FLANGED ADAPTOR
④ 2 Nos. 200mm DIA. FLANGED SPIGOT STEEL PIPE 1200mm LONG
⑤ 1 No. 200mm DIA. ALL FLANGED VOLUMETRIC METER
⑥ 1 Nos. 200mm DIA. PE FLANGE ADAPTER (STUB END) COMPLETE WITH METAL BACK UP RING

DETAIL | **CH. 0+324.85, 1+053.78, 2+300.00, 2+840.00 3+700.00, 4+440.00, 5+300.00 & 6+160.00**
LINE TW-KAE - TEE & DAV-02, 03

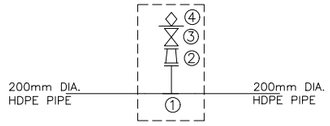

DESCRIPTION
8 Nos. REQUIRED

① 1 Nos. 200x100mm DIA. PE INVERTED TEE WITH ONE END FLANGED
② 1 No. 100x50mm DIA. ALL FLANGED CONCENTRIC TAPER
③ 1 No. 50mm DIA. FLANGED GATE VALVE
④ 1 No. 50mm DIA. SINGLE ORIFICE AIR VALVE

DETAIL | **CH. 2+180.00, 3+600.00, 6+783.67**
LINE TW-KAE -TEE& GV(WO)
- 01, 02, 03

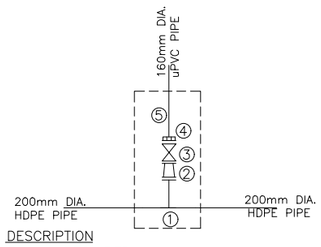

DESCRIPTION
3 Nos. REQUIRED

① 1 No. 200x100mm DIA. PE INVERTED TEE WITH ONE END FLANGED
② 1 No. 100x80mm DIA. ALL FLANGED CONCENTRIC TAPER
③ 1 No. 80mm DIA. ALL FLANGED GATE VALVE
④ 1 No. 80mm DIA. FLANGED ADAPTOR
⑤ 1 No. 80mm DIA. uPVC CLASS "B" PIPE (LENGTH TO SUIT ON SITE)

DETAIL | **CH. 7+200.00**
LINE TW-KAE- BLANK FLANGE

DESCRIPTION
1 No. REQUIRED

① 1 No. 200mm DIA. PE FLANGE ADAPTOR (STUB END) COMPLETE WITH METAL BACK UP RING
② 1 No. 200mm DIA. BLANK FLANGE

NOTES:

1. CONTOUR LEVELS ARE IN METERS AT TWO METER INTERVALS
2. GRID VALUES ARE IN METERS AT 200 METER INTERVALS
3. GEOLOGICAL CONDITIONS INDICATED ON DRAWING ARE FOR GENERAL GUIDANCE ONLY
4. MINIMUM PIPELINE SLOPES TO BE 1:200
5. DRAWING TO BE READ IN CONJUCTION WITH STANDARD DRAWINGS

LEGEND:

	ROAD (TARMAC)
	ROAD / TRACK (EARTH / MURRAM)
	FENCE / HEDGE
1480	CONTOURS
	ELECTRIC POST
	CULVERT
	GATE
	TEMPORARY STRUCTURES
	BUILDINGS
	PROPOSED TREATED WATER GRAVITY MAIN
TP10	TRAVERSE POINT & No.
	TRIAL HOLE
30°	HORIZONTAL BEND (H) OR VERTICAL BEND (V) WITH ANGLE INDICATED
	RIVER/STREAM
V.J.	VIKING JOHNSON
GV	GATE VALVE
SV-01	SECTIONAL VALVE & No.
WO-01	WASHOUT VALVE & No.
SAV-01	AIR VALVE & No.
WM	WATER METER
	PROPOSED MASONRY CHAMBER
	PROPOSED VALVE BOX
n	PIPELINE GRADIENT WITH SLOPE DIRECTION (SLOPE MIN. OR 1 IN n)

ISSUED FOR CONSTRUCTION

	REVISIONS		SIGN	DATE	APPROVED
		BY			
		CHECKED			
		BY			
		CHECKED			
		BY			
		CHECKED			
		BY			
		CHECKED			

CLIENT:
THE CHIEF EXECUTIVE OFFICER
TANA WATER DEVELOPMENT AGENCY
P.O BOX 1292 - 10100,
NYERI, KENYA

CONSULTING ENGINEERS:
MANGAT I.B PATEL(MIBP) LIMITED
MIBP CONSULTING ENGINEERS
P.O BOX 48674,00100-GPO,
NAIROBI, KENYA
E-MAIL: mibp.nairobi@mibp.co.ke
TEL: +254-2-2710500

PROJECT TITLE:
KENYA TOWNS SUSTAINABLE WATER SUPPLY AND SANITATION PROGRAM

CONTRACT No.TWSB/ADB/003/2019-2020
CONSTRUCTION OF CHUKA AND CHOGORIA WATER SUPPLY AND SANITATION PROJECT

LOT 1: CHUKA WATER SUPPLY

DRAWING TITLE:
TREATED WATER GRAVITY MAIN KAANWA LINE EXENSION (MWANJATI LINE) PIPE FITTINGS SHEET 7 OF 7

Designed by:	A.M.I	Drawn by:	W.M.M
Checked by:	N.J.N	Approved by:	R.S.R
Scale:	H- 1:4000, V- 1:400	Date:	JUNE 2025

DRG No. **M407/CK/TWKW/07** REV 1

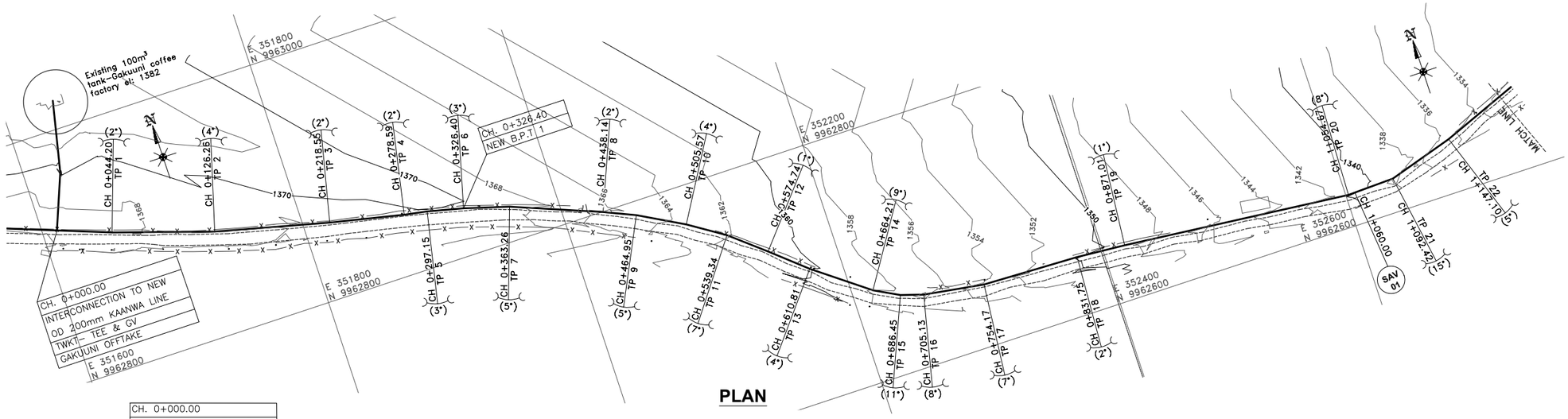

PLAN

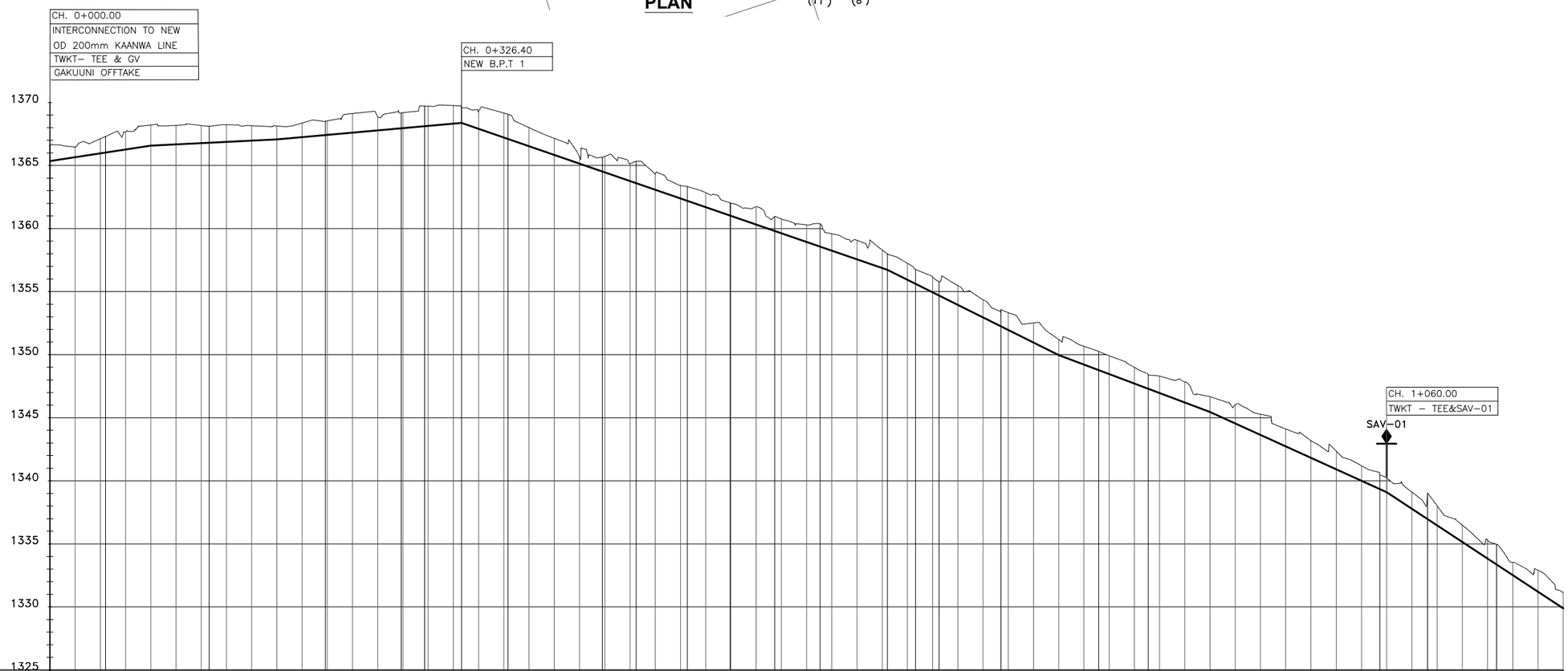

DATUM (m) 1325

TYPE OF PIPE AND SIZE: DN 200mm HDPE PIPE - PE 100 SDR 11 (PN 16)

GEOLOGICAL CONDITION: RED LOAM SOIL

EXISTING GROUND LEVEL (m)	1366.59	1366.46	1367.12	1367.30	1367.65	1368.21	1368.18	1368.17	1368.11	1368.23	1368.15	1368.13
INVERT LEVELS (m)	1365.35	1365.66	1365.96	1366.03	1366.27	1366.57	1366.67	1366.77	1366.81	1366.87	1366.97	1367.07
CHAINAGE (m)	0+000.00	0+020.00	0+040.00	0+044.20	0+060.00	0+080.00	0+100.00	0+120.00	0+126.26	0+140.00	0+160.00	0+180.00
DEPTH OF INVERT (m)	1.23	0.80	1.15	1.28	1.38	1.64	1.50	1.39	1.31	1.35	1.18	1.06
SLOPE OF PIPE (H/V)	1:65.60					1:199.39						1:113.17
REFERENCE PEG NO.				TP 1					TP 2			

EXISTING GROUND LEVEL (m)	1368.37	1368.51	1368.54	1369.12	1368.86	1369.17	1369.19	1369.71	1369.70	1369.75	1369.58	1369.32
INVERT LEVELS (m)	1367.25	1367.42	1367.43	1367.60	1367.78	1367.95	1367.96	1368.11	1368.14	1368.31	1368.37	1367.90
CHAINAGE (m)	0+200.00	0+218.55	0+220.00	0+240.00	0+260.00	0+278.59	0+280.00	0+297.15	0+300.00	0+320.00	0+326.40	0+340.00
DEPTH OF INVERT (m)	1.12	1.10	1.11	1.52	1.08	1.22	1.23	1.60	1.56	1.44	1.21	1.42
SLOPE OF PIPE (H/V)											−1:29.00	
REFERENCE PEG NO.		TP 3				TP 4		TP 5			TP 6	

EXISTING GROUND LEVEL (m)	1369.16	1369.07	1368.00	1367.15	1365.69	1365.65	1365.71	1365.14	1365.33	1364.32	1363.41	1363.33
INVERT LEVELS (m)	1367.21	1367.10	1366.52	1365.83	1365.14	1364.52	1364.45	1363.76	1363.59	1363.07	1362.38	1362.19
CHAINAGE (m)	0+360.00	0+363.26	0+380.00	0+400.00	0+420.00	0+438.14	0+440.00	0+460.00	0+464.95	0+480.00	0+500.00	0+505.57
DEPTH OF INVERT (m)	1.95	1.97	1.48	1.32	0.55	1.14	1.26	1.38	1.74	1.25	1.03	1.14
SLOPE OF PIPE (H/V)												
REFERENCE PEG NO.		TP 7				TP 8			TP 9			TP 10

EXISTING GROUND LEVEL (m)	1362.84	1362.04	1362.01	1361.73	1360.96	1360.76	1360.29	1360.36	1359.59	1359.07	1358.30	1357.99
INVERT LEVELS (m)	1361.69	1361.03	1361.00	1360.31	1359.81	1359.62	1358.93	1358.56	1358.25	1357.56	1356.87	1356.72
CHAINAGE (m)	0+520.00	0+539.34	0+540.00	0+560.00	0+574.74	0+580.00	0+600.00	0+610.81	0+620.00	0+640.00	0+660.00	0+664.21
DEPTH OF INVERT (m)	1.15	1.01	1.01	1.42	1.15	1.14	1.36	1.80	1.34	1.51	1.44	1.27
SLOPE OF PIPE (H/V)												−1:20.09
REFERENCE PEG NO.		TP 11			TP 12			TP 13				TP 14

EXISTING GROUND LEVEL (m)	1357.24	1356.75	1356.17	1355.78	1355.48	1354.36	1353.56	1353.33	1352.52	1351.19	1350.66	1350.27
INVERT LEVELS (m)	1355.94	1355.61	1354.94	1354.68	1353.94	1352.95	1352.24	1351.95	1350.96	1349.96	1349.21	1348.77
CHAINAGE (m)	0+680.00	0+686.45	0+700.00	0+705.13	0+720.00	0+740.00	0+754.17	0+760.00	0+780.00	0+800.00	0+820.00	0+831.75
DEPTH OF INVERT (m)	1.31	1.14	1.23	1.10	1.54	1.41	1.32	1.38	1.56	1.23	1.45	1.50
SLOPE OF PIPE (H/V)										−1:26.64		
REFERENCE PEG NO.		TP 15		TP 16			TP 17					TP 18

EXISTING GROUND LEVEL (m)	1349.92	1348.99	1348.39	1348.30	1347.83	1346.67	1346.03	1345.28	1344.11	1343.17	1342.36	1341.20
INVERT LEVELS (m)	1348.46	1347.71	1347.30	1346.96	1346.21	1345.46	1344.55	1343.64	1342.73	1341.82	1340.91	1340.00
CHAINAGE (m)	0+840.00	0+860.00	0+871.01	0+880.00	0+900.00	0+920.00	0+940.00	0+960.00	0+980.00	1+000.00	1+020.00	1+040.00
DEPTH OF INVERT (m)	1.45	1.28	1.09	1.34	1.62	1.21	1.49	1.64	1.38	1.35	1.45	1.20
SLOPE OF PIPE (H/V)						−1:21.97						
REFERENCE PEG NO.			TP 19									

EXISTING GROUND LEVEL (m)	1340.47	1340.24	1339.11	1338.95	1338.02	1336.48	1335.31	1334.96	1333.55	1332.90	1331.14
INVERT LEVELS (m)	1339.33	1339.09	1337.77	1336.95	1336.46	1335.14	1333.83	1333.36	1332.51	1331.20	1329.88
CHAINAGE (m)	1+054.67	1+060.00	1+080.00	1+092.42	1+100.00	1+120.00	1+140.00	1+147.10	1+160.00	1+180.00	1+200.00
DEPTH OF INVERT (m)	1.14	1.15	1.33	1.99	1.56	1.34	1.48	1.60	1.03	1.70	1.26
SLOPE OF PIPE (H/V)		−1:15.21									−1:23.
REFERENCE PEG NO.	TP 20			TP 21				TP 22			

LONGITUDINAL SECTION

0 100 200m

NOTES:

1. CONTOUR LEVELS ARE IN METERS AT TWO METER INTERVALS
2. GRID VALUES ARE IN METERS AT 200 METER INTERVALS
3. GEOLOGICAL CONDITIONS INDICATED ON DRAWING ARE FOR GENERAL GUIDANCE ONLY
4. MINIMUM PIPELINE SLOPES TO BE 1:200
5. DRAWING TO BE READ IN CONJUCTION WITH STANDARD DRAWINGS

LEGEND:

	ROAD (TARMAC)
	ROAD / TRACK (EARTH / MURRAM)
	FENCE / HEDGE
1480	CONTOURS
○	ELECTRIC POST
	CULVERT
	GATE
▨	TEMPORARY STRUCTURES
☐	BUILDINGS
	PROPOSED TREATED WATER GRAVITY MAIN
TP10	TRAVERSE POINT & No.
⊗	TRIAL HOLE
30°	HORIZONTAL BEND (H) OR VERTICAL BEND (V) WITH ANGLE INDICATED
	RIVER/STREAM
V.J.	VIKING JOHNSON
GV	GATE VALVE
SV-01	SECTIONAL VALVE & No.
WO-01	WASHOUT VALVE & No.
SAV-01	AIR VALVE & No.
WM	WATER METER
	PROPOSED MASONRY CHAMBER
	PROPOSED VALVE BOX
n	PIPELINE GRADIENT WITH SLOPE DIRECTION (SLOPE MIN. OR 1 IN n)

ISSUED FOR CONSTRUCTION

REVISIONS		SIGN	DATE	APPROVED
	BY			
	CHECKED			
	BY			
	CHECKED			
	BY			
	CHECKED			
	BY			
	CHECKED			

CLIENT:
THE CHIEF EXECUTIVE OFFICER
TANA WATER WORKS
DEVELOPMENT AGENCY
P.O BOX 1292 - 10100,
NYERI, KENYA

CONSULTING ENGINEERS:
MANGAT I.B PATEL(MIBP) LIMITED
P.O BOX 48674,00100-GPO,
NAIROBI, KENYA
E-MAIL: mibp.nairobi@mibp.co.ke
TEL: +254-20-2710500

PROJECT TITLE:
KENYA TOWNS SUSTAINABLE WATER SUPPLY AND SANITATION PROGRAM

CONTRACT No.TWSB/ADB/003/2019-2020
CONSTRUCTION OF CHUKA AND CHOGORIA WATER SUPPLY AND SANITATION PROJECT

LOT 1: CHUKA WATER SUPPLY

DRAWING TITLE:
TREATED WATER GRAVITY MAIN
KATHWANA LINE
PLAN & LONGITUDINAL SECTION
CH. 0+000.00 - 1+200.00
SHEET 1 OF 26

Designed by: A.M.I	Drawn by: P.W.K
Checked by: N.J.N	Approved by: N.J.N
Scale: H- 1:4000, V- 1:400	Date: FEB 2024

DRG No. **M407/CK/TWKT/01** REV

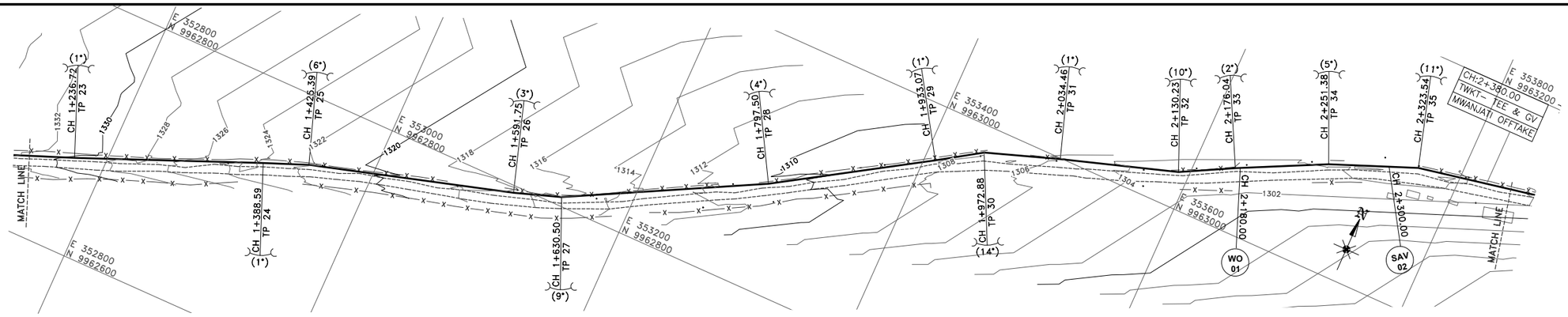

PLAN

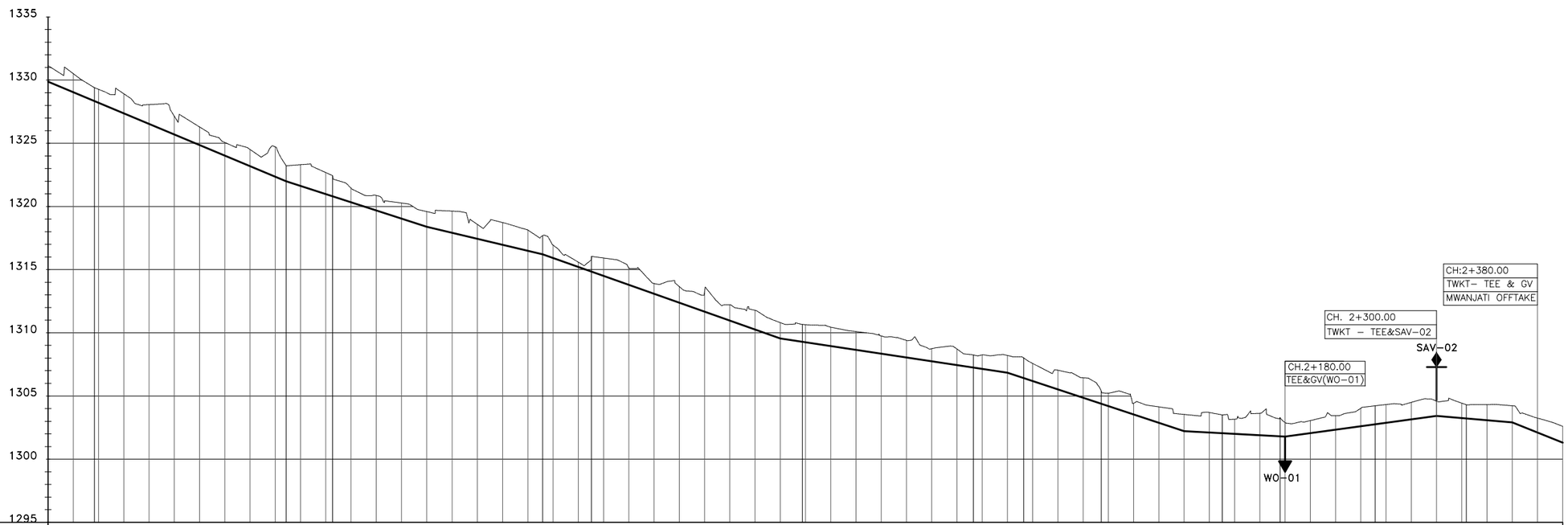

TYPE OF PIPE AND SIZE: DN 200mm HDPE PIPE - PE 100 SDR 11 (PN 16)

GEOLOGICAL CONDITION: RED LOAM SOIL

CHAINAGE (m)	EXISTING GROUND LEVEL (m)	INVERT LEVELS (m)	DEPTH OF INVERT (m)	REFERENCE PEG NO.
1+200.00	1331.14	1329.88	1.26	
1+220.00	1330.50	1329.05	1.46	
1+236.72	1329.40	1328.35	1.05	TP 23
1+240.00	1329.27	1328.21	1.06	
1+260.00	1328.92	1327.37	1.54	
1+280.00	1328.06	1326.54	1.53	
1+300.00	1327.14	1325.70	1.44	
1+320.00	1326.29	1324.86	1.43	
1+340.00	1325.06	1324.02	1.04	
1+360.00	1324.51	1323.19	1.32	
1+380.00	1324.71	1322.35	2.36	
1+388.59	1323.22	1321.99	1.23	TP 24
1+400.00	1323.30	1321.62	1.68	
1+420.00	1322.68	1320.98	1.70	
1+425.39	1322.44	1320.80	1.64	TP 25
1+440.00	1321.45	1320.33	1.12	
1+460.00	1320.87	1319.69	1.18	
1+480.00	1320.27	1319.04	1.23	
1+500.00	1319.59	1318.39	1.20	
1+520.00	1319.63	1317.92	1.72	
1+540.00	1318.58	1317.44	1.14	
1+560.00	1318.73	1316.96	1.76	
1+580.00	1318.14	1316.49	1.65	
1+591.75	1317.68	1316.21	1.48	TP 26
1+600.00	1316.94	1315.91	1.03	
1+620.00	1315.59	1315.21	0.39	
1+630.50	1316.05	1314.83	1.21	TP 27
1+640.00	1315.92	1314.50	1.42	
1+660.00	1315.14	1313.79	1.35	
1+680.00	1313.91	1313.08	0.82	
1+700.00	1313.66	1312.38	1.28	
1+720.00	1313.18	1311.67	1.51	
1+740.00	1312.22	1310.96	1.26	
1+760.00	1311.79	1310.25	1.53	
1+780.00	1310.81	1309.55	1.26	
1+797.50	1310.66	1309.28	1.38	TP 28
1+800.00	1310.64	1309.24	1.40	
1+820.00	1310.44	1308.94	1.50	
1+840.00	1310.10	1308.64	1.46	
1+860.00	1309.75	1308.34	1.41	
1+880.00	1309.40	1308.04	1.36	
1+900.00	1308.74	1307.74	1.00	
1+920.00	1308.72	1307.44	1.28	
1+933.07	1308.25	1307.24	1.01	TP 29
1+940.00	1308.25	1307.14	1.11	
1+960.00	1308.21	1306.84	1.37	
1+972.88	1308.01	1306.42	1.60	TP 30
1+980.00	1307.58	1306.18	1.40	
2+000.00	1307.04	1305.52	1.52	
2+020.00	1306.44	1304.86	1.58	
2+034.46	1305.35	1304.38	0.97	TP 31
2+040.00	1305.22	1304.20	1.02	
2+060.00	1304.43	1303.54	0.88	
2+080.00	1304.14	1302.88	1.26	
2+100.00	1303.54	1302.22	1.32	
2+120.00	1303.69	1302.11	1.58	TP 32
2+130.23	1303.50	1302.06	1.45	
2+140.00	1303.16	1302.00	1.16	
2+160.00	1303.63	1301.89	1.74	
2+176.04	1303.27	1301.80	1.47	TP 33
2+180.00	1302.90	1301.78	1.12	
2+200.00	1303.05	1302.06	1.00	
2+220.00	1303.43	1302.33	1.10	
2+240.00	1304.03	1302.60	1.43	
2+251.38	1304.23	1302.76	1.47	TP 34
2+260.00	1304.32	1302.88	1.44	
2+280.00	1304.50	1303.15	1.35	
2+300.00	1304.59	1303.42	1.17	
2+320.00	1304.43	1303.25	1.18	
2+323.54	1304.30	1303.22	1.08	TP 35
2+340.00	1304.32	1303.09	1.23	
2+360.00	1304.23	1302.92	1.31	
2+380.00	1303.25	1302.12	1.14	
2+400.00	1302.60	1301.31	1.28	

SLOPE OF PIPE (H/V): –1:15.21, –1:23.90, –1:30.97, –1:41.92, –1:28.26, –1:66.54, –1:30.31, –1:182.41, 1:73.21, –1:118.77, –1:24.84, 34.1:

LONGITUDINAL SECTION

0 100 200m

NOTES:

1. CONTOUR LEVELS ARE IN METERS AT TWO METER INTERVALS
2. GRID VALUES ARE IN METERS AT 200 METER INTERVALS
3. GEOLOGICAL CONDITIONS INDICATED ON DRAWING ARE FOR GENERAL GUIDANCE ONLY
4. MINIMUM PIPELINE SLOPES TO BE 1:200
5. DRAWING TO BE READ IN CONJUCTION WITH STANDARD DRAWINGS

LEGEND:

- ROAD (TARMAC)
- ROAD / TRACK (EARTH / MURRAM)
- FENCE / HEDGE
- 1480 CONTOURS
- ELECTRIC POST
- CULVERT
- GATE
- TEMPORARY STRUCTURES
- BUILDINGS
- PROPOSED TREATED WATER GRAVITY MAIN
- TP10 TRAVERSE POINT & No.
- TRIAL HOLE
- 30° HORIZONTAL BEND (H) OR VERTICAL BEND (V) WITH ANGLE INDICATED
- RIVER/STREAM
- V.J. VIKING JOHNSON
- GV GATE VALVE
- SV-01 SECTIONAL VALVE & No.
- WO-01 WASHOUT VALVE & No.
- SAV-01 AIR VALVE & No.
- WM WATER METER
- PROPOSED MASONRY CHAMBER
- PROPOSED VALVE BOX
- n PIPELINE GRADIENT WITH SLOPE DIRECTION (SLOPE MIN. OR 1 IN n)

ISSUED FOR CONSTRUCTION

REVISIONS		SIGN	DATE	APPROVED
	BY			
	CHECKED			
	BY			
	CHECKED			
	BY			
	CHECKED			
	BY			
	CHECKED			

CLIENT: THE CHIEF EXECUTIVE OFFICER
TANA WATER WORKS DEVELOPMENT AGENCY
P.O BOX 1292 - 10100,
NYERI, KENYA

CONSULTING ENGINEERS:
MANGAT I.B PATEL(MIBP) LIMITED
P.O BOX 48674,00100-GPO,
NAIROBI, KENYA
E-MAIL: mibp.nairobi@mibp.co.ke
TEL: +254-20-2710500

PROJECT TITLE:
KENYA TOWNS SUSTAINABLE WATER SUPPLY AND SANITATION PROGRAM

CONTRACT No.TWSB/ADB/003/2019-2020
CONSTRUCTION OF CHUKA AND CHOGORIA WATER SUPPLY AND SANITATION PROJECT

LOT 1: CHUKA WATER SUPPLY

DRAWING TITLE:
TREATED WATER GRAVITY MAIN
KATHWANA LINE
PLAN & LONGITUDINAL SECTION
CH. 1+200.00 - 2+400.00
SHEET 2 OF 26

Designed by:	A.M.I	Drawn by:	P.W.K
Checked by:	N.J.N	Approved by:	N.J.N
Scale:	H- 1:4000, V- 1:400	Date:	FEB 2024

DRG No. M407/CK/TWKT/02 REV

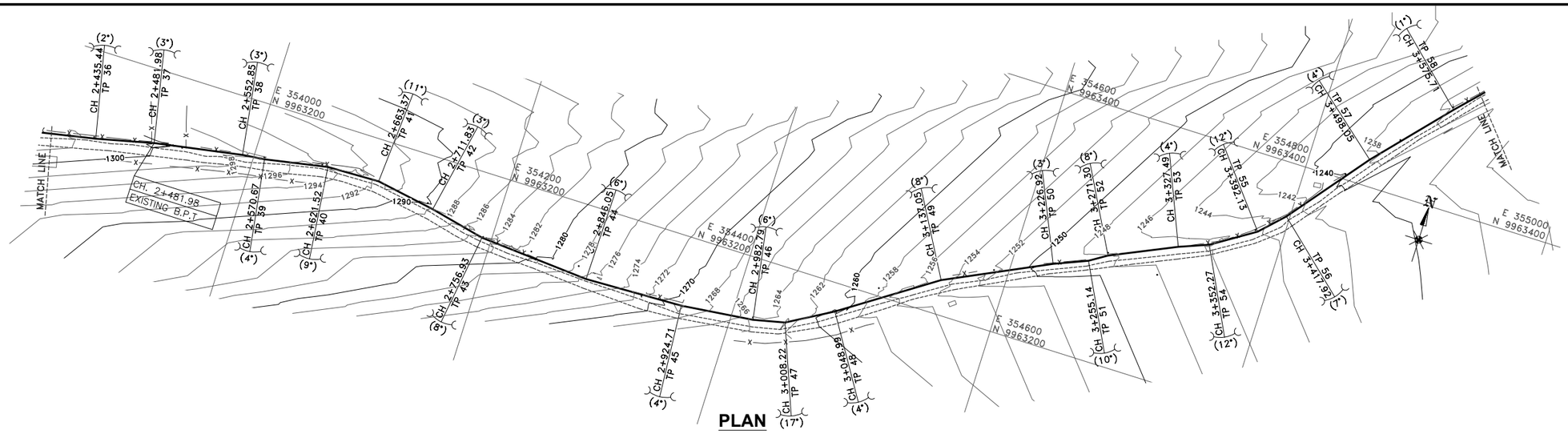

PLAN

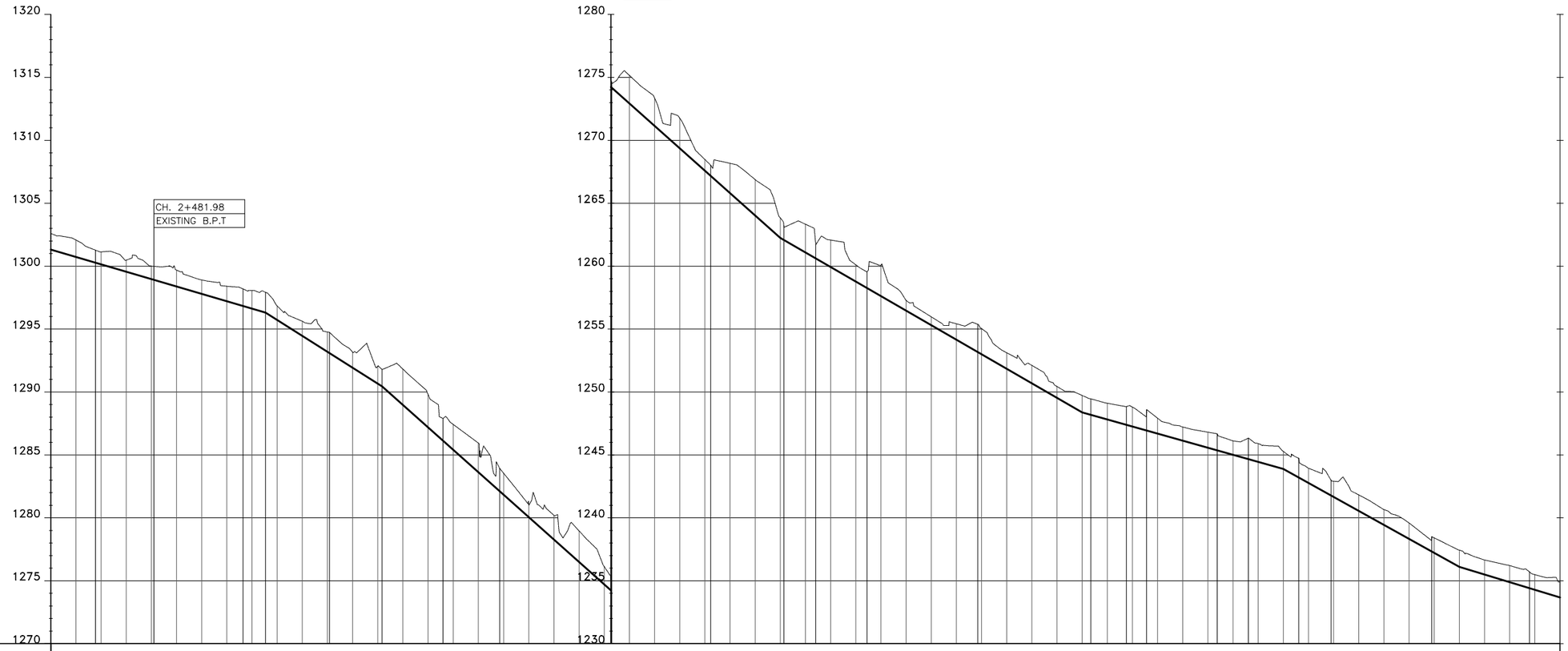

DATUM (m)

TYPE OF PIPE AND SIZE: DN 200mm HDPE PIPE - PE 100 SDR 11 (PN 16)

GEOLOGICAL CONDITION: RED LOAM SOIL

CHAINAGE (m)	EXISTING GROUND LEVEL (m)	INVERT LEVELS (m)	DEPTH OF INVERT (m)	REFERENCE PEG NO.
2+400.00	1302.60	1301.31	1.28	
2+420.00	1302.08	1300.73	1.35	
2+435.44	1301.27	1300.27	1.00	TP 36
2+440.00	1301.14	1300.14	1.00	
2+460.00	1300.48	1299.56	0.92	
2+480.00	1300.00	1298.97	1.03	
2+481.98	1299.99	1298.91	1.07	TP 37
2+500.00	1299.69	1298.38	1.30	
2+520.00	1298.90	1297.80	1.11	
2+540.00	1298.41	1297.21	1.19	
2+552.85	1298.19	1296.84	1.35	TP 38
2+560.00	1298.06	1296.63	1.44	
2+570.67	1297.92	1296.31	1.61	TP 39
2+580.00	1296.84	1295.72	1.12	
2+600.00	1295.62	1294.46	1.16	
2+620.00	1294.77	1293.19	1.57	
2+621.52	1294.74	1293.10	1.64	TP 40
2+640.00	1293.16	1291.93	1.24	
2+660.00	1292.06	1290.66	1.39	
2+663.37	1291.78	1290.45	1.33	TP 41
2+680.00	1291.81	1288.97	2.85	
2+700.00	1289.80	1287.19	2.61	
2+711.83	1287.90	1286.13	1.77	TP 42
2+720.00	1287.42	1285.40	2.02	
2+740.00	1285.94	1283.62	2.32	
2+756.93	1283.93	1282.11	1.81	TP 43
2+760.00	1283.55	1281.84	1.71	
2+780.00	1281.11	1280.06	1.05	
2+800.00	1280.20	1278.28	1.92	
2+820.00	1278.97	1276.49	2.47	
2+840.00	1276.13	1274.71	1.42	
2+846.05	1274.61	1274.17	0.43	TP 44
2+860.00	1275.17	1272.93	2.24	
2+880.00	1273.38	1271.15	2.23	
2+900.00	1271.77	1269.37	2.40	
2+920.00	1268.48	1267.58	0.90	
2+924.71	1268.02	1267.16	0.86	TP 45
2+940.00	1268.17	1265.80	2.37	
2+960.00	1266.88	1264.02	2.86	
2+980.00	1263.84	1262.24	1.60	
2+982.79	1263.22	1262.08	1.15	TP 46
3+000.00	1263.33	1261.08	2.25	
3+008.22	1261.70	1260.61	1.10	TP 47
3+020.00	1262.08	1259.93	2.15	
3+040.00	1260.11	1258.77	1.34	
3+048.99	1259.56	1258.25	1.31	TP 48
3+060.00	1260.08	1257.62	2.46	
3+080.00	1257.28	1256.46	0.82	
3+100.00	1255.98	1255.31	0.67	
3+120.00	1255.42	1254.15	1.27	
3+137.05	1255.39	1253.17	2.22	TP 49
3+140.00	1255.04	1253.00	2.04	
3+160.00	1253.12	1251.84	1.28	
3+180.00	1252.12	1250.69	1.43	
3+200.00	1250.44	1249.53	0.90	
3+220.00	1249.73	1248.38	1.35	
3+226.92	1249.46	1248.19	1.27	TP 50
3+240.00	1249.11	1247.82	1.29	
3+255.14	1248.84	1247.39	1.44	TP 51
3+260.00	1248.60	1247.26	1.34	
3+271.30	1248.60	1246.94	1.66	TP 52
3+280.00	1247.92	1246.69	1.22	
3+300.00	1247.21	1246.13	1.08	
3+320.00	1246.81	1245.57	1.24	
3+327.49	1246.68	1245.36	1.32	TP 53
3+340.00	1246.11	1245.01	1.11	
3+352.27	1246.34	1244.66	1.68	TP 54
3+360.00	1245.90	1244.45	1.45	
3+380.00	1245.28	1243.88	1.40	
3+392.13	1244.73	1243.21	1.53	TP 55
3+400.00	1243.94	1242.77	1.17	
3+417.92	1242.98	1241.77	1.21	TP 56
3+420.00	1242.91	1241.66	1.25	
3+440.00	1241.82	1240.55	1.27	
3+460.00	1240.66	1239.43	1.22	
3+480.00	1239.59	1238.32	1.26	
3+498.05	1238.50	1237.32	1.18	TP 57
3+500.00	1238.41	1237.21	1.20	
3+520.00	1237.43	1236.10	1.34	
3+540.00	1236.65	1235.49	1.16	
3+560.00	1236.21	1234.88	1.32	
3+575.71	1235.70	1234.41	1.29	TP 58
3+580.00	1235.48	1234.28	1.21	
3+600.00	1234.91	1233.67	1.24	

SLOPE OF PIPE (H/V): 1:24.94 – 1:34.13 – 1:15.81 – 1:11.22 – 1:17.32 – 1:35.58 – 1:17.98 – 1:32.97 – 1:89.06

LONGITUDINAL SECTION

0 100 200m

NOTES:

1. CONTOUR LEVELS ARE IN METERS AT TWO METER INTERVALS
2. GRID VALUES ARE IN METERS AT 200 METER INTERVALS
3. GEOLOGICAL CONDITIONS INDICATED ON DRAWING ARE FOR GENERAL GUIDANCE ONLY
4. MINIMUM PIPELINE SLOPES TO BE 1:200
5. DRAWING TO BE READ IN CONJUCTION WITH STANDARD DRAWINGS

LEGEND:

- ROAD (TARMAC)
- ROAD / TRACK (EARTH / MURRAM)
- FENCE / HEDGE
- 1480 CONTOURS
- ELECTRIC POST
- CULVERT
- GATE
- TEMPORARY STRUCTURES
- BUILDINGS
- PROPOSED TREATED WATER GRAVITY MAIN
- TP10 TRAVERSE POINT & No.
- TRIAL HOLE
- 30° HORIZONTAL BEND (H) OR VERTICAL BEND (V) WITH ANGLE INDICATED
- RIVER/STREAM
- V.J. VIKING JOHNSON
- GV GATE VALVE
- SV-01 SECTIONAL VALVE & No.
- WO-01 WASHOUT VALVE & No.
- SAV-01 AIR VALVE & No.
- WM WATER METER
- PROPOSED MASONRY CHAMBER
- PROPOSED VALVE BOX
- n PIPELINE GRADIENT WITH SLOPE DIRECTION (SLOPE MIN. OR 1 IN n)

ISSUED FOR CONSTRUCTION

REVISIONS	SIGN	DATE	APPROVED
BY			
CHECKED			
BY			
CHECKED			
BY			
CHECKED			
BY			
CHECKED			

CLIENT:
THE CHIEF EXECUTIVE OFFICER
TANA WATER WORKS DEVELOPMENT AGENCY
P.O BOX 1292 - 10100,
NYERI, KENYA

CONSULTING ENGINEERS:
MANGAT I.B PATEL(MIBP) LIMITED
P.O BOX 48674,00100-GPO,
NAIROBI, KENYA
E-MAIL: mibp.nairobi@mibp.co.ke
TEL: +254-20-2710500

PROJECT TITLE:
KENYA TOWNS SUSTAINABLE WATER SUPPLY AND SANITATION PROGRAM

CONTRACT No.TWSB/ADB/003/2019-2020
CONSTRUCTION OF CHUKA AND CHOGORIA WATER SUPPLY AND SANITATION PROJECT

LOT 1: CHUKA WATER SUPPLY

DRAWING TITLE:
TREATED WATER GRAVITY MAIN KATHWANA LINE PLAN & LONGITUDINAL SECTION CH. 2+400.00 - 3+600.00
SHEET 3 OF 26

Designed by:	A.M.I	Drawn by:	P.W.K
Checked by:	N.J.N	Approved by:	N.J.N
Scale:	H- 1:4000, V- 1:400	Date:	FEB 2024

DRG No. M407/CK/TWKT/03 REV

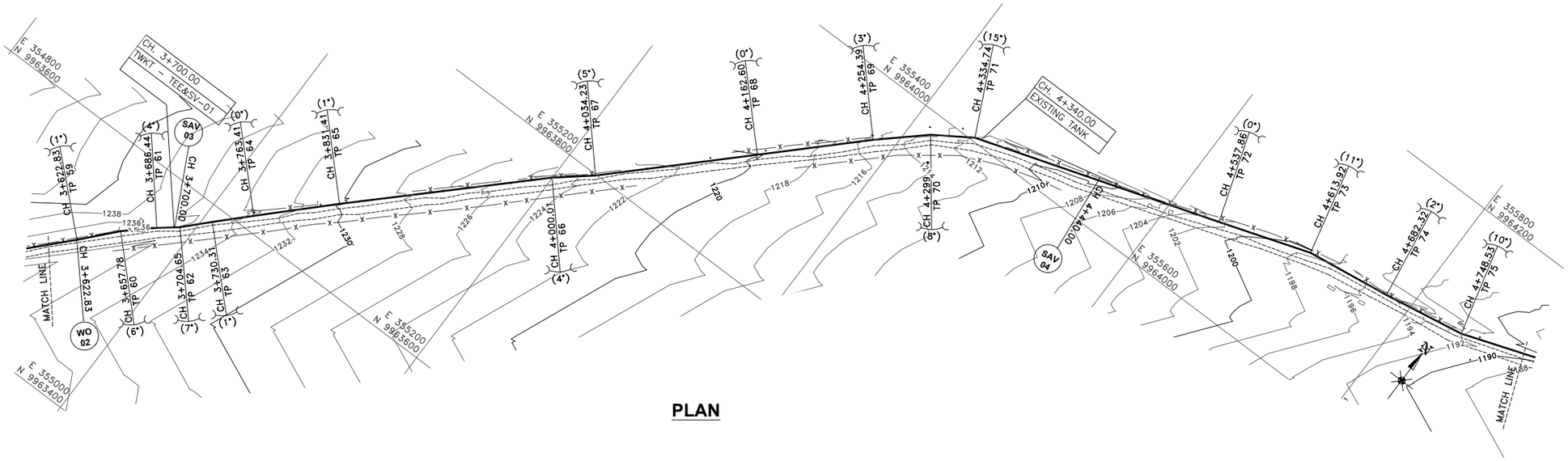

PLAN

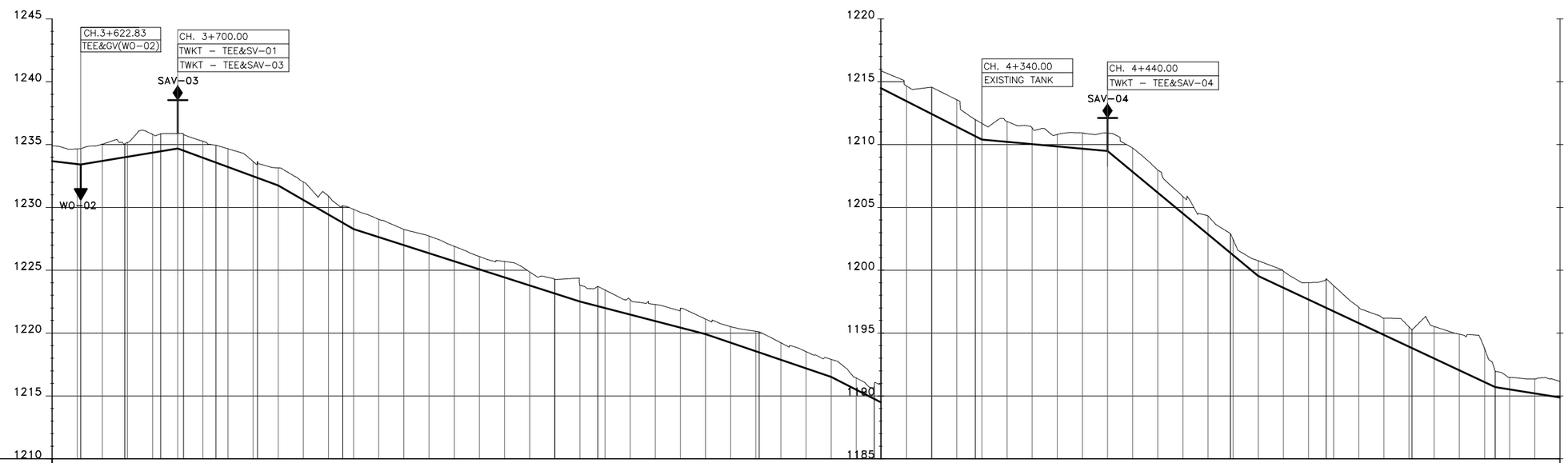

TYPE OF PIPE AND SIZE: DN 200mm HDPE PIPE - PE 100 SDR 11 (PN 16)

GEOLOGICAL CONDITION: RED LOAM SOIL

CHAINAGE (m)	EXISTING GROUND LEVEL (m)	INVERT LEVELS (m)	DEPTH OF INVERT (m)
3+600.00	1234.91	1233.67	1.24
3+620.00	1234.66	1233.45	1.21
3+622.83	1234.67	1233.41	1.25
3+640.00	1235.04	1233.70	1.34
3+657.78	1235.06	1233.99	1.07
3+660.00	1235.16	1234.02	1.14
3+680.00	1235.80	1234.35	1.45
3+686.44	1235.85	1234.46	1.40
3+700.00	1235.88	1234.68	1.21
3+704.65	1235.78	1234.51	1.28
3+720.00	1235.26	1233.95	1.32
3+730.31	1234.95	1233.57	1.39
3+740.00	1234.66	1233.21	1.45
3+760.00	1233.65	1232.48	1.17
3+763.41	1233.65	1232.35	1.30
3+780.00	1233.14	1231.74	1.40
3+800.00	1232.02	1230.59	1.43
3+820.00	1230.89	1229.43	1.46
3+831.41	1230.12	1228.78	1.34
3+840.00	1229.84	1228.28	1.56
3+860.00	1229.05	1227.64	1.41
3+880.00	1228.24	1227.00	1.25
3+900.00	1227.72	1226.36	1.36
3+920.00	1226.91	1225.71	1.19
3+940.00	1226.09	1225.07	1.02
3+960.00	1225.70	1224.43	1.26
3+980.00	1224.87	1223.79	1.08
4+000.00	1224.26	1223.15	1.11
4+000.01	1224.26	1223.15	1.11
4+020.00	1223.82	1222.51	1.31
4+034.23	1223.72	1222.14	1.58
4+040.00	1223.43	1221.99	1.44
4+060.00	1222.67	1221.47	1.20
4+080.00	1222.27	1220.96	1.32
4+100.00	1221.98	1220.44	1.54
4+120.00	1221.12	1219.92	1.20
4+140.00	1220.52	1219.24	1.28
4+160.00	1220.14	1218.56	1.58
4+162.60	1220.10	1218.47	1.63
4+180.00	1219.23	1217.87	1.35
4+200.00	1218.53	1217.19	1.34
4+220.00	1217.91	1216.51	1.40
4+240.00	1216.43	1215.49	0.94
4+254.39	1215.75	1214.76	0.99
4+260.00	1215.85	1214.47	1.38
4+280.00	1214.66	1213.45	1.21
4+299.94	1214.56	1212.44	2.13
4+300.00	1214.56	1212.43	2.13
4+320.00	1213.57	1211.42	2.15
4+334.74	1211.98	1210.66	1.32
4+340.00	1211.68	1210.40	1.29
4+360.00	1211.83	1210.21	1.62
4+380.00	1211.32	1210.03	1.29
4+400.00	1210.80	1209.85	0.95
4+420.00	1210.93	1209.67	1.27
4+440.00	1210.91	1209.48	1.42
4+460.00	1209.71	1207.83	1.89
4+480.00	1207.97	1206.17	1.80
4+500.00	1205.87	1204.51	1.35
4+520.00	1204.32	1202.86	1.47
4+537.86	1202.92	1201.38	1.54
4+540.00	1202.43	1201.20	1.23
4+560.00	1200.75	1199.54	1.21
4+580.00	1199.92	1198.60	1.31
4+600.00	1199.01	1197.67	1.35
4+613.92	1199.33	1197.01	2.32
4+620.00	1198.77	1196.73	2.04
4+640.00	1197.05	1195.79	1.26
4+660.00	1196.19	1194.85	1.34
4+680.00	1195.48	1193.92	1.57
4+682.32	1195.25	1193.81	1.44
4+700.00	1195.50	1192.98	2.52
4+720.00	1194.91	1192.04	2.87
4+740.00	1193.78	1191.10	2.67
4+748.53	1191.96	1190.71	1.26
4+760.00	1191.47	1190.52	0.95
4+780.00	1191.34	1190.20	1.14
4+800.00	1191.16	1189.88	1.28

SLOPE OF PIPE (H/V): −1:22.28.06 | 1:61.04 | −1:27.27 | −1:17.31 | −1:31.19 | −1:38.64 | −1:29.32 | −1:19.85 | −1:109.59 | −1:12.07 | −1:21.34 | −1:62.37 | −1:9.46

REFERENCE PEG NO.: TP 59, TP 60, TP 61, TP 62, TP 63, TP 64, TP 65, TP 66, TP 67, TP 68, TP 69, TP 70, TP 71, TP 72, TP 73, TP 74, TP 75

LONGITUDINAL SECTION

0 100 200m

NOTES:

1. CONTOUR LEVELS ARE IN METERS AT TWO METER INTERVALS
2. GRID VALUES ARE IN METERS AT 200 METER INTERVALS
3. GEOLOGICAL CONDITIONS INDICATED ON DRAWING ARE FOR GENERAL GUIDANCE ONLY
4. MINIMUM PIPELINE SLOPES TO BE 1:200
5. DRAWING TO BE READ IN CONJUCTION WITH STANDARD DRAWINGS

LEGEND:

- ROAD (TARMAC)
- ROAD / TRACK (EARTH / MURRAM)
- FENCE / HEDGE
- 1480 CONTOURS
- ELECTRIC POST
- CULVERT
- GATE
- TEMPORARY STRUCTURES
- BUILDINGS
- PROPOSED TREATED WATER GRAVITY MAIN
- TP10 TRAVERSE POINT & No.
- TRIAL HOLE
- 30° HORIZONTAL BEND (H) OR VERTICAL BEND (V) WITH ANGLE INDICATED
- RIVER/STREAM
- V.J. VIKING JOHNSON
- GV GATE VALVE
- SV-01 SECTIONAL VALVE & No.
- WO-01 WASHOUT VALVE & No.
- SAV-01 AIR VALVE & No.
- WM WATER METER
- PROPOSED MASONRY CHAMBER
- PROPOSED VALVE BOX
- n PIPELINE GRADIENT WITH SLOPE DIRECTION (SLOPE MIN. OR 1 IN n)

ISSUED FOR CONSTRUCTION

REVISIONS	SIGN	DATE	APPROVED
BY			
CHECKED			
BY			
CHECKED			
BY			
CHECKED			
BY			
CHECKED			

CLIENT: THE CHIEF EXECUTIVE OFFICER
TANA WATER WORKS DEVELOPMENT AGENCY
P.O BOX 1292 - 10100,
NYERI, KENYA

CONSULTING ENGINEERS:
MANGAT I.B PATEL(MIBP) LIMITED
P.O BOX 48674,00100-GPO,
NAIROBI, KENYA
E-MAIL: mibp.nairobi@mibp.co.ke
TEL: +254-20-2710500

PROJECT TITLE:
KENYA TOWNS SUSTAINABLE WATER SUPPLY AND SANITATION PROGRAM

CONTRACT No.TWSB/ADB/003/2019-2020
CONSTRUCTION OF CHUKA AND CHOGORIA WATER SUPPLY AND SANITATION PROJECT

LOT 1: CHUKA WATER SUPPLY

DRAWING TITLE:
TREATED WATER GRAVITY MAIN KATHWANA LINE PLAN & LONGITUDINAL SECTION CH. 3+600.00 - 4+800.00 SHEET 4 OF 26

Designed by:	A.M.I	Drawn by:	P.W.K
Checked by:	N.J.N	Approved by:	N.J.N
Scale:	H- 1:4000, V- 1:400	Date:	FEB 2024

DRG No. M407/CK/TWKT/04 REV

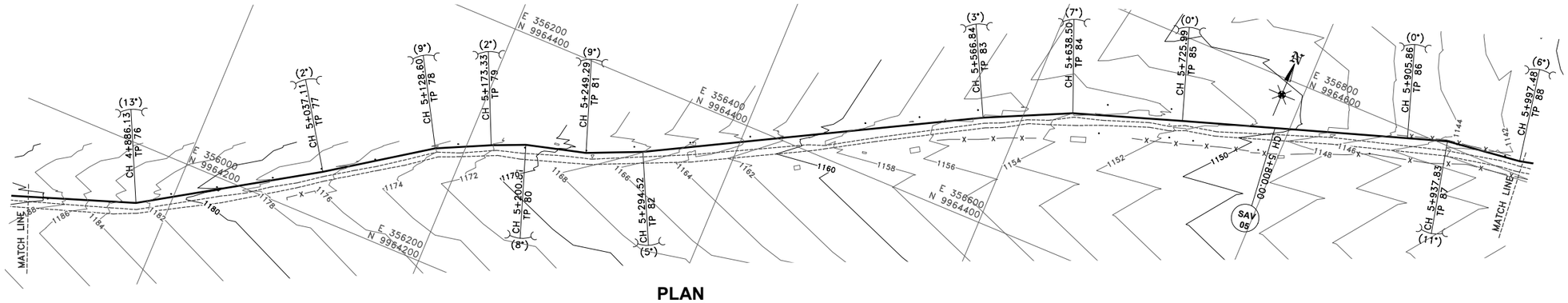

PLAN

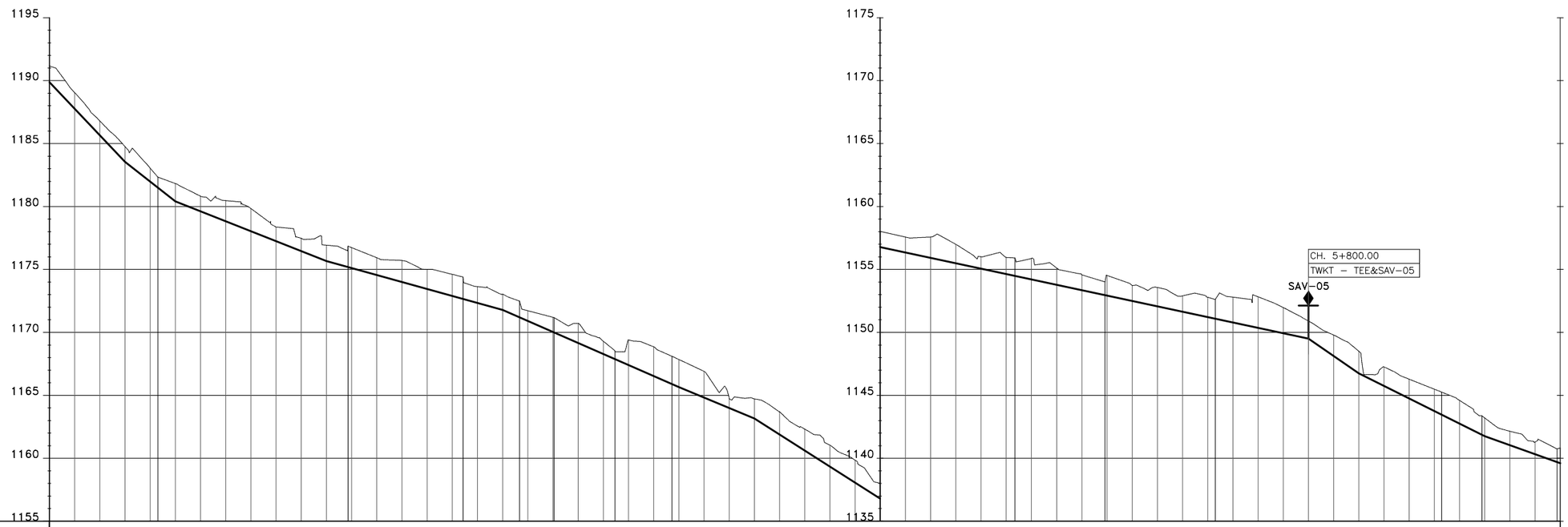

TYPE OF PIPE AND SIZE: DN 200mm HDPE PIPE - PE 100 SDR 11 (PN 16)

GEOLOGICAL CONDITION: RED LOAM SOIL

CHAINAGE (m)	EXISTING GROUND LEVEL (m)	INVERT LEVELS (m)	DEPTH OF INVERT (m)
4+800.00	1191.16	1189.88	1.28
4+820.00	1189.05	1187.77	1.28
4+840.00	1186.80	1185.65	1.15
4+860.00	1184.76	1183.54	1.22
4+880.00	1183.05	1181.98	1.08
4+886.13	1182.33	1181.49	0.84
4+900.00	1181.83	1180.41	1.42
4+920.00	1180.82	1179.62	1.20
4+940.00	1180.47	1178.83	1.64
4+960.00	1179.84	1178.04	1.80
4+980.00	1178.37	1177.25	1.12
5+000.00	1177.48	1176.46	1.02
5+020.00	1176.93	1175.67	1.26
5+037.11	1176.85	1175.20	1.65
5+040.00	1176.73	1175.12	1.62
5+060.00	1175.93	1174.56	1.37
5+080.00	1175.71	1174.01	1.71
5+100.00	1175.01	1173.45	1.56
5+120.00	1174.61	1172.90	1.71
5+128.60	1174.40	1172.66	1.74
5+140.00	1173.64	1172.34	1.29
5+160.00	1173.03	1171.79	1.24
5+173.33	1172.49	1171.21	1.28
5+180.00	1171.72	1170.91	0.81
5+200.00	1171.20	1170.04	1.16
5+200.81	1171.18	1170.00	1.17
5+220.00	1170.71	1169.16	1.54
5+240.00	1169.29	1168.29	1.01
5+249.29	1168.50	1167.88	0.62
5+260.00	1167.41	1166.54	0.99
5+280.00	1168.85	1166.54	2.31
5+294.52	1168.10	1165.90	2.20
5+300.00	1167.84	1165.66	2.18
5+320.00	1166.90	1164.83	2.07
5+340.00	1164.76	1163.99	0.77
5+360.00	1164.71	1163.15	1.56
5+380.00	1163.69	1161.88	1.82
5+400.00	1162.31	1160.60	1.71
5+420.00	1161.04	1159.33	1.71
5+440.00	1159.84	1158.05	1.79
5+460.00	1158.02	1156.78	1.24
5+480.00	1157.57	1156.35	1.22
5+500.00	1157.58	1155.92	1.65
5+520.00	1156.99	1155.50	1.50
5+540.00	1156.01	1155.07	0.94
5+560.00	1155.96	1154.64	1.32
5+566.84	1155.91	1154.49	1.42
5+580.00	1155.88	1154.21	1.67
5+600.00	1155.12	1153.78	1.33
5+620.00	1154.57	1153.36	1.22
5+638.50	1154.01	1152.96	1.05
5+640.00	1154.55	1152.93	1.60
5+660.00	1153.72	1152.50	1.22
5+680.00	1153.57	1152.07	1.50
5+700.00	1152.90	1151.64	1.26
5+720.00	1152.79	1151.22	1.58
5+725.99	1152.61	1151.09	1.53
5+740.00	1152.80	1150.79	2.01
5+760.00	1152.83	1150.36	2.47
5+780.00	1151.97	1149.93	2.04
5+800.00	1150.90	1149.50	1.40
5+820.00	1149.79	1148.13	1.67
5+840.00	1148.51	1146.75	1.76
5+860.00	1147.26	1145.75	1.51
5+880.00	1146.28	1144.75	1.53
5+900.00	1145.49	1143.76	1.73
5+905.86	1145.26	1143.46	1.79
5+920.00	1144.60	1142.76	1.84
5+937.83	1143.37	1141.87	1.50
5+940.00	1143.21	1141.76	1.44
5+960.00	1142.15	1141.04	1.10
5+980.00	1141.29	1140.32	0.96
5+997.48	1140.74	1139.69	1.05
6+000.00	1140.82	1139.60	1.22

SLOPE OF PIPE (H/V): −1:62.37 −1:9.46 −1:12.77 −1:25.32 −1:36.07 −1:22.85 −1:23.90 −1:15.89 −1:46.73 −1:14.53 −1:20.05 −1:27.80 −1:73.06

REFERENCE PEG NO.: TP 76, TP 77, TP 78, TP 79, TP 80, TP 81, TP 82, TP 83, TP 84, TP 85, TP 86, TP 87, TP 88

LONGITUDINAL SECTION

0 100 200m

NOTES:

1. CONTOUR LEVELS ARE IN METERS AT TWO METER INTERVALS
2. GRID VALUES ARE IN METERS AT 200 METER INTERVALS
3. GEOLOGICAL CONDITIONS INDICATED ON DRAWING ARE FOR GENERAL GUIDANCE ONLY
4. MINIMUM PIPELINE SLOPES TO BE 1:200
5. DRAWING TO BE READ IN CONJUCTION WITH STANDARD DRAWINGS

LEGEND:

- ROAD (TARMAC)
- ROAD / TRACK (EARTH / MURRAM)
- FENCE / HEDGE
- 1480 CONTOURS
- ELECTRIC POST
- CULVERT
- GATE
- TEMPORARY STRUCTURES
- BUILDINGS
- PROPOSED TREATED WATER GRAVITY MAIN
- TP10 TRAVERSE POINT & No.
- TRIAL HOLE
- 30° HORIZONTAL BEND (H) OR VERTICAL BEND (V) WITH ANGLE INDICATED
- RIVER/STREAM
- V.J. VIKING JOHNSON
- GV GATE VALVE
- SV-01 SECTIONAL VALVE & No.
- WO-01 WASHOUT VALVE & No.
- SAV-01 AIR VALVE & No.
- WM WATER METER
- PROPOSED MASONRY CHAMBER
- PROPOSED VALVE BOX
- n PIPELINE GRADIENT WITH SLOPE DIRECTION (SLOPE MIN. OR 1 IN n)

ISSUED FOR CONSTRUCTION

REVISIONS		SIGN	DATE	APPROVED
	BY			
	CHECKED			
	BY			
	CHECKED			
	BY			
	CHECKED			
	BY			
	CHECKED			

CLIENT: THE CHIEF EXECUTIVE OFFICER
TANA WATER WORKS DEVELOPMENT AGENCY
P.O BOX 1292 - 10100,
NYERI, KENYA

CONSULTING ENGINEERS:
MANGAT I.B PATEL(MIBP) LIMITED
P.O BOX 48674,00100-GPO,
NAIROBI, KENYA
E-MAIL: mibp.nairobi@mibp.co.ke
TEL: +254-20-2710500

PROJECT TITLE:
KENYA TOWNS SUSTAINABLE WATER SUPPLY AND SANITATION PROGRAM

CONTRACT No.TWSB/ADB/003/2019-2020
CONSTRUCTION OF CHUKA AND CHOGORIA WATER SUPPLY AND SANITATION PROJECT

LOT 1: CHUKA WATER SUPPLY

DRAWING TITLE:
TREATED WATER GRAVITY MAIN KATHWANA LINE PLAN & LONGITUDINAL SECTION CH. 4+800.00 - 6+000.00 SHEET 5 OF 26

Designed by:	A.M.I	Drawn by:	P.W.K
Checked by:	N.J.N	Approved by:	N.J.N
Scale:	H- 1:4000, V- 1:400	Date:	FEB 2024

DRG No. M407/CK/TWKT/05 REV

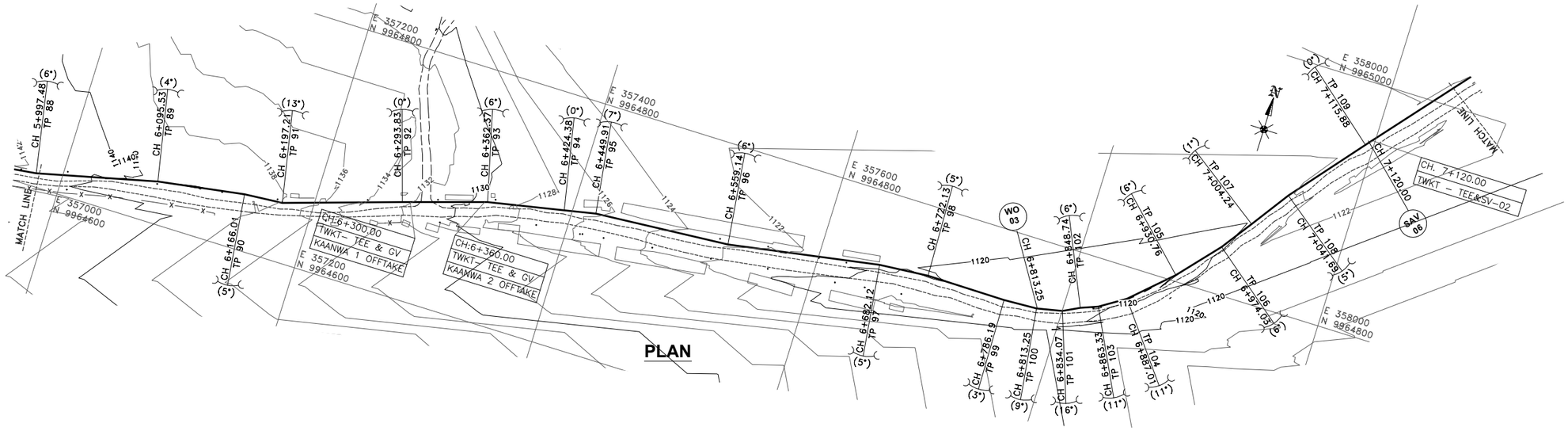

PLAN

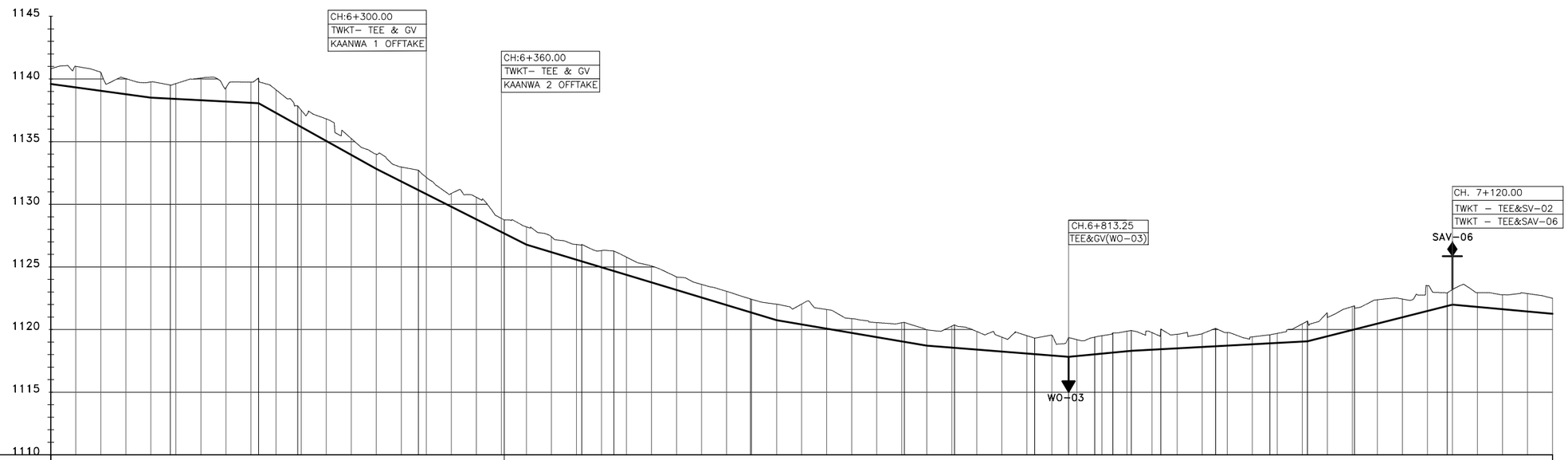

TYPE OF PIPE AND SIZE: DN 200mm HDPE PIPE - PE 100 SDR 11 (PN 16) | DN 160mm HDPE PIPE - PE 100 SDR 11 (PN 16)

GEOLOGICAL CONDITION: RED LOAM SOIL

CHAINAGE (m)	EXISTING GROUND LEVEL (m)	INVERT LEVELS (m)	DEPTH OF INVERT (m)
6+000.00	1140.82	1139.60	1.22
6+020.00	1141.01	1139.33	1.68
6+040.00	1140.53	1139.06	1.48
6+060.00	1140.03	1138.78	1.24
6+080.00	1139.77	1138.51	1.26
6+095.53	1139.52	1138.43	1.09
6+100.00	1139.64	1138.41	1.23
6+120.00	1140.08	1138.31	1.77
6+140.00	1139.31	1138.20	1.11
6+160.00	1139.75	1138.10	1.65
6+166.01	1140.08	1138.07	2.01
6+180.00	1139.13	1137.29	1.84
6+197.21	1137.86	1136.33	1.52
6+200.00	1137.52	1136.18	1.34
6+220.00	1136.82	1135.06	1.76
6+240.00	1135.26	1133.95	1.31
6+260.00	1133.99	1132.83	1.16
6+280.00	1132.97	1131.82	1.15
6+293.83	1132.72	1131.12	1.59
6+300.00	1132.15	1130.81	1.34
6+320.00	1130.86	1129.80	1.06
6+340.00	1130.56	1128.79	1.77
6+360.00	1128.88	1127.78	1.09
6+362.37	1128.75	1127.66	1.09
6+380.00	1128.20	1126.77	1.43
6+400.00	1127.41	1126.17	1.24
6+420.00	1126.79	1125.57	1.22
6+424.38	1126.79	1125.43	1.36
6+440.00	1126.30	1124.96	1.34
6+449.91	1126.27	1124.66	1.60
6+460.00	1125.78	1124.36	1.42
6+480.00	1125.08	1123.76	1.32
6+500.00	1124.20	1123.15	1.05
6+520.00	1123.60	1122.55	1.05
6+540.00	1123.05	1121.95	1.10
6+559.14	1122.44	1121.37	1.07
6+560.00	1122.41	1121.34	1.07
6+580.00	1122.02	1120.74	1.28
6+600.00	1122.04	1120.40	1.63
6+620.00	1121.60	1120.07	1.53
6+640.00	1120.87	1119.73	1.14
6+660.00	1120.56	1119.39	1.16
6+680.00	1120.54	1119.06	1.48
6+682.12	1120.57	1119.02	1.55
6+700.00	1119.98	1118.72	1.26
6+720.00	1120.27	1118.56	1.71
6+722.13	1120.38	1118.55	1.83
6+740.00	1119.84	1118.40	1.44
6+760.00	1119.39	1118.25	1.14
6+780.00	1119.51	1118.09	1.42
6+786.19	1119.31	1118.04	1.27
6+800.00	1119.53	1117.93	1.60
6+813.25	1119.36	1117.83	1.53
6+820.00	1119.19	1117.89	1.30
6+834.07	1119.39	1118.03	1.37
6+840.00	1119.31	1118.08	1.23
6+848.74	1119.71	1118.16	1.55
6+860.00	1119.87	1118.27	1.60
6+863.33	1119.93	1118.30	1.62
6+880.00	1119.75	1118.39	1.36
6+887.01	1120.04	1118.43	1.61
6+900.00	1119.62	1118.50	1.12
6+920.00	1119.67	1118.61	1.06
6+930.76	1120.10	1118.67	1.43
6+940.00	1119.76	1118.72	1.04
6+960.00	1119.41	1118.82	0.59
6+974.03	1119.58	1118.90	0.68
6+980.00	1119.69	1118.93	0.76
7+000.00	1120.45	1119.04	1.41
7+004.24	1120.67	1119.06	1.61
7+020.00	1121.22	1119.46	1.76
7+040.00	1121.84	1119.96	1.88
7+041.69	1121.90	1120.01	1.89
7+060.00	1122.38	1120.47	1.91
7+080.00	1122.44	1120.97	1.46
7+100.00	1123.51	1121.48	2.04
7+115.88	1122.93	1121.88	1.05
7+120.00	1123.19	1121.98	1.21
7+140.00	1122.95	1121.80	1.15
7+160.00	1122.78	1121.62	1.16
7+180.00	1122.87	1121.45	1.43
7+200.00	1122.50	1121.27	1.23

SLOPE OF PIPE (H/V): –1:27.80, –1:73.06, –1:197.42, –1:17.93, –1:19.80, –1:33.16, –1:59.38, –1:127.10, 1:105.59, 1:185.53, 1:39.66, –1:111.92, –1:35.40

REFERENCE PEG NO.: TP 89, TP 90, TP 91, TP 92, TP 93, TP 94, TP 95, TP 96, TP 97, TP 98, TP 99, TP 100, TP 101, TP 102, TP 103, TP 104, TP 105, TP 106, TP 107, TP 108, TP 109

LONGITUDINAL SECTION

0 100 200m

NOTES:

1. CONTOUR LEVELS ARE IN METERS AT TWO METER INTERVALS
2. GRID VALUES ARE IN METERS AT 200 METER INTERVALS
3. GEOLOGICAL CONDITIONS INDICATED ON DRAWING ARE FOR GENERAL GUIDANCE ONLY
4. MINIMUM PIPELINE SLOPES TO BE 1:200
5. DRAWING TO BE READ IN CONJUCTION WITH STANDARD DRAWINGS

LEGEND:

- ROAD (TARMAC)
- ROAD / TRACK (EARTH / MURRAM)
- FENCE / HEDGE
- 1480 CONTOURS
- ELECTRIC POST
- CULVERT
- GATE
- TEMPORARY STRUCTURES
- BUILDINGS
- PROPOSED TREATED WATER GRAVITY MAIN
- TP10 TRAVERSE POINT & No.
- TRIAL HOLE
- 30° HORIZONTAL BEND (H) OR VERTICAL BEND (V) WITH ANGLE INDICATED
- RIVER/STREAM
- V.J. VIKING JOHNSON
- GV GATE VALVE
- SV-01 SECTIONAL VALVE & No.
- WO-01 WASHOUT VALVE & No.
- SAV-01 AIR VALVE & No.
- WM WATER METER
- PROPOSED MASONRY CHAMBER
- PROPOSED VALVE BOX
- n PIPELINE GRADIENT WITH SLOPE DIRECTION (SLOPE MIN. OR 1 IN n)

ISSUED FOR CONSTRUCTION

REVISIONS	SIGN	DATE	APPROVED
BY			
CHECKED			
BY			
CHECKED			
BY			
CHECKED			
BY			
CHECKED			

CLIENT: THE CHIEF EXECUTIVE OFFICER
TANA WATER WORKS DEVELOPMENT AGENCY
P.O BOX 1292 - 10100,
NYERI, KENYA

CONSULTING ENGINEERS:
MANGAT I.B PATEL(MIBP) LIMITED
P.O BOX 48674,00100-GPO,
NAIROBI, KENYA
E-MAIL: mibp.nairobi@mibp.co.ke
TEL: +254-20-2710500

PROJECT TITLE:
KENYA TOWNS SUSTAINABLE WATER SUPPLY AND SANITATION PROGRAM

CONTRACT No.TWSB/ADB/003/2019-2020

CONSTRUCTION OF CHUKA AND CHOGORIA WATER SUPPLY AND SANITATION PROJECT

LOT 1: CHUKA WATER SUPPLY

DRAWING TITLE:
TREATED WATER GRAVITY MAIN KATHWANA LINE PLAN & LONGITUDINAL SECTION CH. 6+000.00 - 7+200.00 SHEET 6 OF 26

Designed by:	A.M.I	Drawn by:	P.W.K
Checked by:	N.J.N	Approved by:	N.J.N
Scale:	H- 1:4000, V- 1:400	Date:	FEB 2024

DRG No. M407/CK/TWKT/06 REV

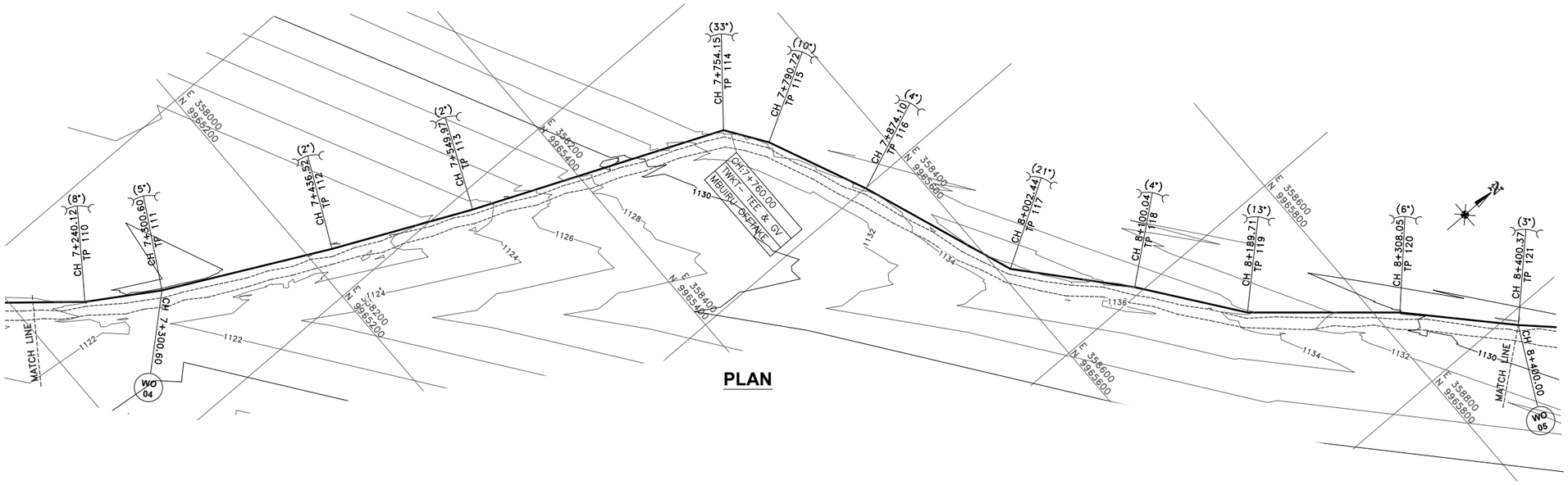

PLAN

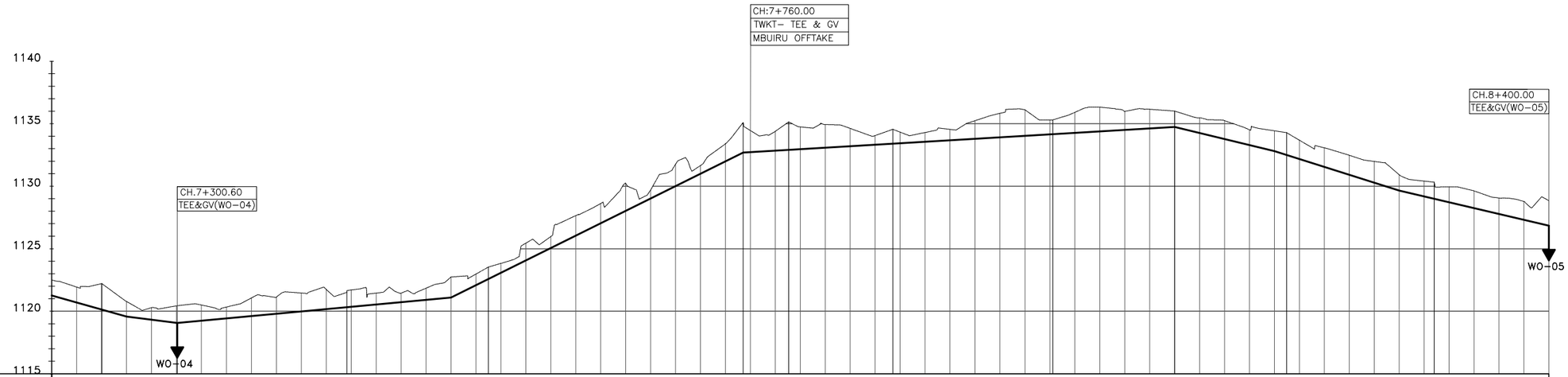

DATUM (m)

TYPE OF PIPE AND SIZE: DN 160mm HDPE PIPE - PE 100 SDR 11 (PN 16)

GEOLOGICAL CONDITION: RED LOAM SOIL

CHAINAGE (m)	EXISTING GROUND LEVEL (m)	INVERT LEVELS (m)	DEPTH OF INVERT (m)	REFERENCE PEG NO.
7+200.00	1122.50	1121.27	1.23	
7+220.00	1121.93	1120.70	1.23	
7+240.00	1122.21	1120.14	2.07	
7+240.12	1122.21	1120.13	2.08	TP 110
7+260.00	1120.78	1119.57	1.20	
7+280.00	1120.29	1119.32	0.97	
7+300.00	1120.43	1119.07	1.36	
7+300.60	1120.44	1119.06	1.38	TP 111
7+320.00	1120.50	1119.24	1.26	
7+340.00	1120.33	1119.43	0.91	
7+360.00	1121.06	1119.61	1.45	
7+380.00	1121.13	1119.80	1.34	
7+400.00	1121.46	1119.98	1.48	
7+420.00	1121.75	1120.17	1.58	
7+436.52	1121.55	1120.32	1.23	TP 112
7+440.00	1121.70	1120.35	1.35	
7+460.00	1121.45	1120.54	0.91	
7+480.00	1121.45	1120.72	0.72	
7+500.00	1121.84	1120.91	0.93	
7+520.00	1122.73	1121.09	1.64	
7+540.00	1122.97	1122.08	0.89	
7+549.97	1123.53	1122.58	0.95	TP 113
7+560.00	1123.83	1123.08	0.75	
7+580.00	1125.44	1124.07	1.38	
7+600.00	1125.97	1125.06	0.92	
7+620.00	1127.65	1126.05	1.60	
7+640.00	1128.62	1127.04	1.58	
7+660.00	1130.23	1128.03	2.20	
7+680.00	1129.69	1129.02	0.67	
7+700.00	1131.75	1130.01	1.74	
7+720.00	1131.66	1131.01	0.65	
7+740.00	1133.40	1132.00	1.41	
7+754.15	1135.09	1132.70	2.40	TP 114
7+760.00	1134.45	1132.73	1.72	
7+780.00	1134.39	1132.85	1.54	
7+790.72	1135.15	1132.91	2.23	TP 115
7+800.00	1134.74	1132.97	1.77	
7+820.00	1134.94	1133.09	1.85	
7+840.00	1134.62	1133.21	1.42	
7+860.00	1134.05	1133.32	0.73	
7+874.10	1134.55	1133.41	1.14	TP 116
7+880.00	1134.32	1133.44	0.88	
7+900.00	1134.29	1133.56	0.73	
7+920.00	1134.55	1133.68	0.87	
7+940.00	1135.24	1133.80	1.44	
7+960.00	1135.83	1133.91	1.91	
7+980.00	1136.12	1134.03	2.08	
8+000.00	1135.31	1134.15	1.15	
8+002.44	1135.31	1134.17	1.14	TP 117
8+020.00	1135.91	1134.27	1.64	
8+040.00	1136.32	1134.39	1.94	
8+060.00	1135.98	1134.51	1.47	
8+080.00	1136.15	1134.62	1.53	
8+100.00	1136.01	1134.74	1.27	TP 118
8+100.04	1136.01	1134.74	1.27	
8+120.00	1135.47	1134.26	1.21	
8+140.00	1135.25	1133.77	1.47	
8+160.00	1134.51	1133.29	1.23	
8+180.00	1134.43	1132.80	1.63	
8+189.71	1134.28	1132.50	1.79	TP 119
8+200.00	1133.68	1132.17	1.51	
8+220.00	1133.07	1131.54	1.53	
8+240.00	1132.47	1130.91	1.56	
8+260.00	1131.98	1130.28	1.70	
8+280.00	1130.92	1129.65	1.27	
8+300.00	1130.41	1129.18	1.23	
8+308.05	1130.32	1129.00	1.33	TP 120
8+320.00	1129.95	1128.72	1.23	
8+340.00	1129.62	1128.25	1.37	
8+360.00	1129.05	1127.78	1.27	
8+380.00	1128.78	1127.32	1.46	
8+400.00	1128.84	1126.85	1.99	

SLOPE OF PIPE (H/V): −1:111.92 −1:35.40 −1:79.32 1:107.94 1:20.18 1:169.19 −1:41.25 −1:31.72 −1:42.84 1:51.39

LONGITUDINAL SECTION

0 100 200m

NOTES:

1. CONTOUR LEVELS ARE IN METERS AT TWO METER INTERVALS
2. GRID VALUES ARE IN METERS AT 200 METER INTERVALS
3. GEOLOGICAL CONDITIONS INDICATED ON DRAWING ARE FOR GENERAL GUIDANCE ONLY
4. MINIMUM PIPELINE SLOPES TO BE 1:200
5. DRAWING TO BE READ IN CONJUCTION WITH STANDARD DRAWINGS

LEGEND:

	ROAD (TARMAC)
	ROAD / TRACK (EARTH / MURRAM)
	FENCE / HEDGE
1480	CONTOURS
○	ELECTRIC POST
	CULVERT
	GATE
▨	TEMPORARY STRUCTURES
☐	BUILDINGS
	PROPOSED TREATED WATER GRAVITY MAIN
TP10	TRAVERSE POINT & No.
⊗	TRIAL HOLE
30°	HORIZONTAL BEND (H) OR VERTICAL BEND (V) WITH ANGLE INDICATED
	RIVER/STREAM
V.J.	VIKING JOHNSON
GV	GATE VALVE
SV-01	SECTIONAL VALVE & No.
WO-01	WASHOUT VALVE & No.
SAV-01	AIR VALVE & No.
WM	WATER METER
	PROPOSED MASONRY CHAMBER
	PROPOSED VALVE BOX
n	PIPELINE GRADIENT WITH SLOPE DIRECTION (SLOPE MIN. OR 1 IN n)

ISSUED FOR CONSTRUCTION

REVISIONS		SIGN	DATE	APPROVED
	BY			
	CHECKED			
	BY			
	CHECKED			
	BY			
	CHECKED			
	BY			
	CHECKED			

CLIENT:
THE CHIEF EXECUTIVE OFFICER
TANA WATER WORKS
DEVELOPMENT AGENCY
P.O BOX 1292 - 10100,
NYERI, KENYA

CONSULTING ENGINEERS:
MANGAT I.B PATEL(MIBP) LIMITED
P.O BOX 48674,00100-GPO,
NAIROBI, KENYA
E-MAIL: mibp.nairobi@mibp.co.ke
TEL: +254-20-2710500

PROJECT TITLE:
KENYA TOWNS SUSTAINABLE WATER SUPPLY AND SANITATION PROGRAM

CONTRACT No.TWSB/ADB/003/2019-2020
CONSTRUCTION OF CHUKA AND CHOGORIA WATER SUPPLY AND SANITATION PROJECT

LOT 1: CHUKA WATER SUPPLY

DRAWING TITLE:
TREATED WATER GRAVITY MAIN
KATHWANA LINE
PLAN & LONGITUDINAL SECTION
CH. 7+200.00 - 8+400.00
SHEET 7 OF 26

Designed by: A.M.I	Drawn by: P.W.K
Checked by: N.J.N	Approved by: N.J.N
Scale: H- 1:4000, V- 1:400	Date: FEB 2024
DRG No. M407/CK/TWKT/07	REV

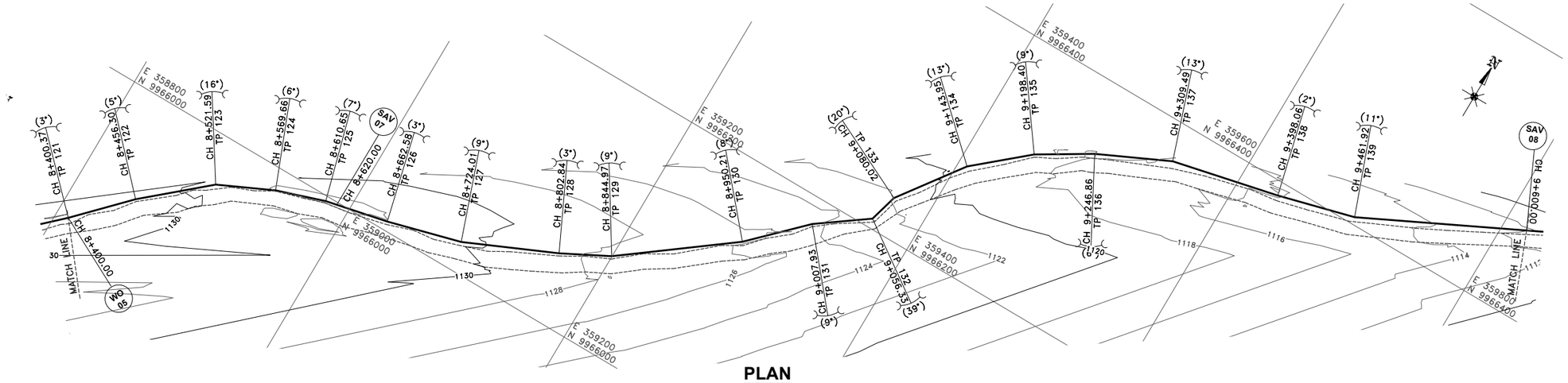

PLAN

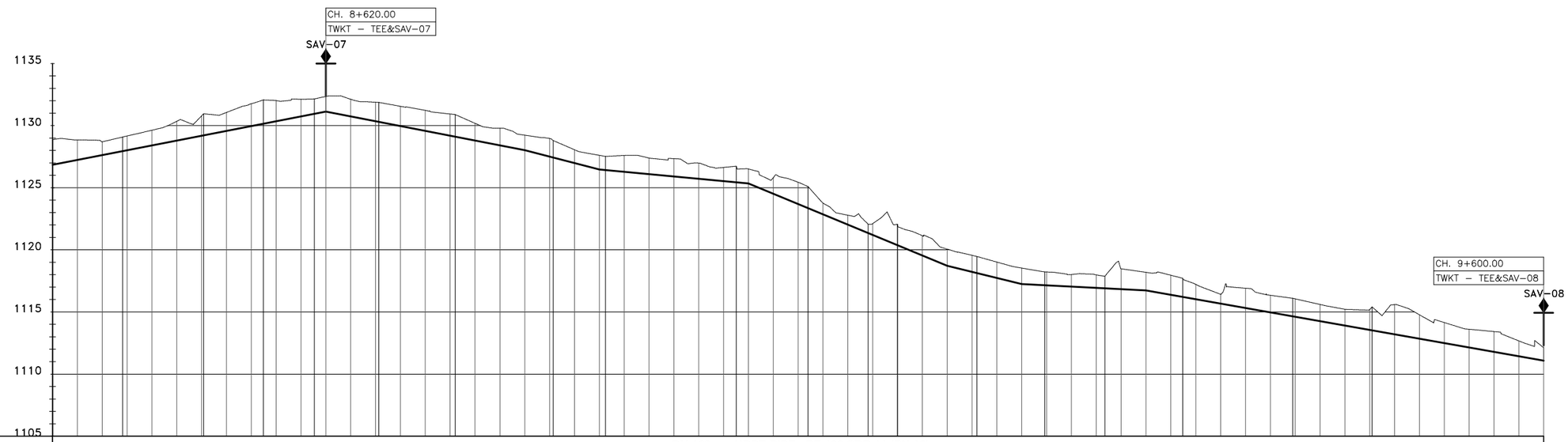

TYPE OF PIPE AND SIZE: DN 160mm HDPE PIPE - PE 100 SDR 11 (PN 16)

GEOLOGICAL CONDITION: RED LOAM SOIL

REFERENCE PEG NO.	EXISTING GROUND LEVEL (m)	INVERT LEVELS (m)	CHAINAGE (m)	DEPTH OF INVERT (m)
TP 121	1128.84	1126.85	8+400.00	1.99
	1128.88	1126.86	8+400.37	2.02
TP 122	1128.85	1127.24	8+420.00	1.61
	1128.69	1127.63	8+440.00	1.06
TP 123	1129.08	1127.94	8+456.30	1.13
	1129.16	1128.02	8+460.00	1.14
TP 124	1129.63	1128.41	8+480.00	1.22
	1130.35	1128.80	8+500.00	1.55
TP 125	1130.79	1129.18	8+520.00	1.60
	1130.95	1129.22	8+521.59	1.73
	1131.06	1129.57	8+540.00	1.49
TP 126	1131.76	1129.96	8+560.00	1.80
	1132.06	1130.15	8+569.66	1.91
	1132.01	1130.35	8+580.00	1.66
TP 127	1132.12	1130.74	8+600.00	1.38
	1132.15	1130.95	8+610.65	1.20
	1132.34	1131.13	8+620.00	1.21
TP 128	1132.12	1130.74	8+640.00	1.38
	1131.88	1130.35	8+660.00	1.53
	1131.87	1130.30	8+662.58	1.57
	1131.55	1129.96	8+680.00	1.59
TP 129	1131.22	1129.57	8+700.00	1.65
	1130.93	1129.18	8+720.00	1.75
	1130.89	1129.11	8+724.01	1.78
	1130.18	1128.80	8+740.00	1.39
	1129.79	1128.41	8+760.00	1.38
	1129.23	1128.02	8+780.00	1.21
TP 130	1128.96	1127.50	8+800.00	1.46
	1128.80	1127.43	8+802.84	1.37
	1128.06	1126.99	8+820.00	1.07
	1127.61	1126.47	8+840.00	1.14
TP 131	1127.52	1126.42	8+844.97	1.10
	1127.60	1126.28	8+860.00	1.31
	1127.39	1126.09	8+880.00	1.30
	1127.34	1125.90	8+900.00	1.44
	1126.99	1125.72	8+920.00	1.27
	1126.63	1125.53	8+940.00	1.11
	1126.73	1125.43	8+950.21	1.30
	1126.51	1125.34	8+960.00	1.17
	1125.81	1124.51	8+980.00	1.30
TP 132	1125.44	1123.68	9+000.00	1.76
	1125.09	1123.36	9+007.93	1.74
	1123.76	1122.86	9+020.00	0.90
	1122.79	1122.03	9+040.00	0.76
	1122.07	1121.35	9+056.33	0.72
TP 133	1122.11	1121.20	9+060.00	0.91
	1122.06	1120.37	9+080.00	1.68
	1122.06	1120.37	9+080.02	1.69
	1121.14	1119.55	9+100.00	1.59
	1120.06	1118.72	9+120.00	1.34
TP 134	1119.56	1118.23	9+140.00	1.33
	1119.46	1118.13	9+143.95	1.33
	1119.02	1117.73	9+160.00	1.28
	1118.53	1117.24	9+180.00	1.29
TP 135	1118.28	1117.15	9+198.40	1.13
	1118.01	1117.04	9+200.00	1.06
	1117.98	1116.94	9+220.00	0.97
TP 136	1117.88	1116.90	9+246.86	0.97
	1118.47	1116.84	9+260.00	1.64
	1118.19	1116.74	9+280.00	1.45
TP 137	1117.95	1116.38	9+300.00	1.57
	1117.71	1116.22	9+309.49	1.50
	1117.22	1116.03	9+320.00	1.19
	1116.42	1115.68	9+340.00	0.75
	1116.91	1115.32	9+360.00	1.59
	1116.34	1114.97	9+380.00	1.38
TP 138	1116.10	1114.65	9+398.06	1.45
	1116.05	1114.61	9+400.00	1.44
	1115.60	1114.26	9+420.00	1.34
	1115.22	1113.91	9+440.00	1.31
TP 139	1115.20	1113.55	9+460.00	1.65
	1115.41	1113.52	9+461.92	1.89
	1115.59	1113.20	9+480.00	2.39
	1114.78	1112.84	9+500.00	1.93
	1114.15	1112.49	9+520.00	1.66
	1113.61	1112.14	9+540.00	1.47
	1113.42	1111.78	9+560.00	1.64
	1112.67	1111.43	9+580.00	1.24
	1112.12	1111.08	9+600.00	1.05

SLOPE OF PIPE (H/V): −1:42.84 | 1:51.39 | −1:51.39 | −1:38.78 | −1:106.06 | −1:24.17 | −1:40.64 | −1:197.74 | −1:56.53 | −1:26.17

LONGITUDINAL SECTION

0 100 200m

NOTES:

1. CONTOUR LEVELS ARE IN METERS AT TWO METER INTERVALS
2. GRID VALUES ARE IN METERS AT 200 METER INTERVALS
3. GEOLOGICAL CONDITIONS INDICATED ON DRAWING ARE FOR GENERAL GUIDANCE ONLY
4. MINIMUM PIPELINE SLOPES TO BE 1:200
5. DRAWING TO BE READ IN CONJUCTION WITH STANDARD DRAWINGS

LEGEND:

- ROAD (TARMAC)
- ROAD / TRACK (EARTH / MURRAM)
- FENCE / HEDGE
- 1480 CONTOURS
- ELECTRIC POST
- CULVERT
- GATE
- TEMPORARY STRUCTURES
- BUILDINGS
- PROPOSED TREATED WATER GRAVITY MAIN
- TP10 TRAVERSE POINT & No.
- TRIAL HOLE
- 30° HORIZONTAL BEND (H) OR VERTICAL BEND (V) WITH ANGLE INDICATED
- RIVER/STREAM
- V.J. VIKING JOHNSON
- GV GATE VALVE
- SV-01 SECTIONAL VALVE & No.
- WO-01 WASHOUT VALVE & No.
- SAV-01 AIR VALVE & No.
- WM WATER METER
- PROPOSED MASONRY CHAMBER
- PROPOSED VALVE BOX
- n PIPELINE GRADIENT WITH SLOPE DIRECTION (SLOPE MIN. OR 1 IN n)

ISSUED FOR CONSTRUCTION

REVISIONS	SIGN	DATE	APPROVED
BY			
CHECKED			
BY			
CHECKED			
BY			
CHECKED			
BY			
CHECKED			

CLIENT: THE CHIEF EXECUTIVE OFFICER
TANA WATER WORKS DEVELOPMENT AGENCY
P.O BOX 1292 - 10100,
NYERI, KENYA

CONSULTING ENGINEERS:
MANGAT I.B PATEL(MIBP) LIMITED
P.O BOX 48674,00100-GPO,
NAIROBI, KENYA
E-MAIL: mibp.nairobi@mibp.co.ke
TEL: +254-20-2710500

PROJECT TITLE:
KENYA TOWNS SUSTAINABLE WATER SUPPLY AND SANITATION PROGRAM

CONTRACT No.TWSB/ADB/003/2019-2020

CONSTRUCTION OF CHUKA AND CHOGORIA WATER SUPPLY AND SANITATION PROJECT

LOT 1: CHUKA WATER SUPPLY

DRAWING TITLE:
TREATED WATER GRAVITY MAIN KATHWANA LINE PLAN & LONGITUDINAL SECTION CH. 8+400.00 - 9+600.00 SHEET 8 OF 26

Designed by:	A.M.I	Drawn by:	P.W.K
Checked by:	N.J.N	Approved by:	N.J.N
Scale:	H- 1:4000, V- 1:400	Date:	FEB 2024

DRG No. M407/CK/TWKT/08 REV

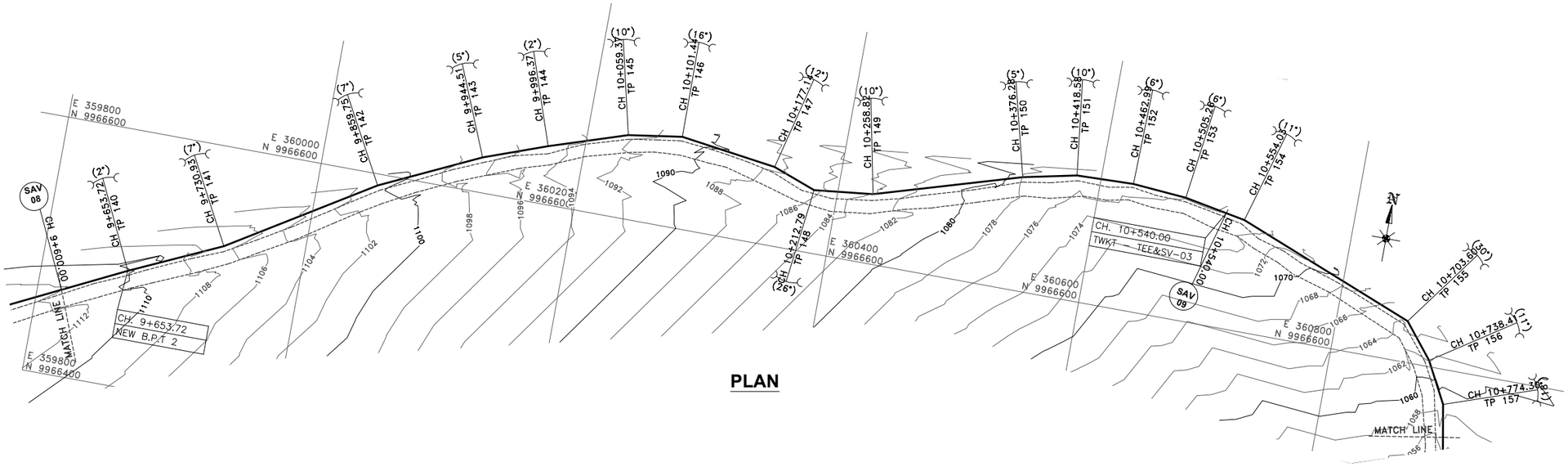

PLAN

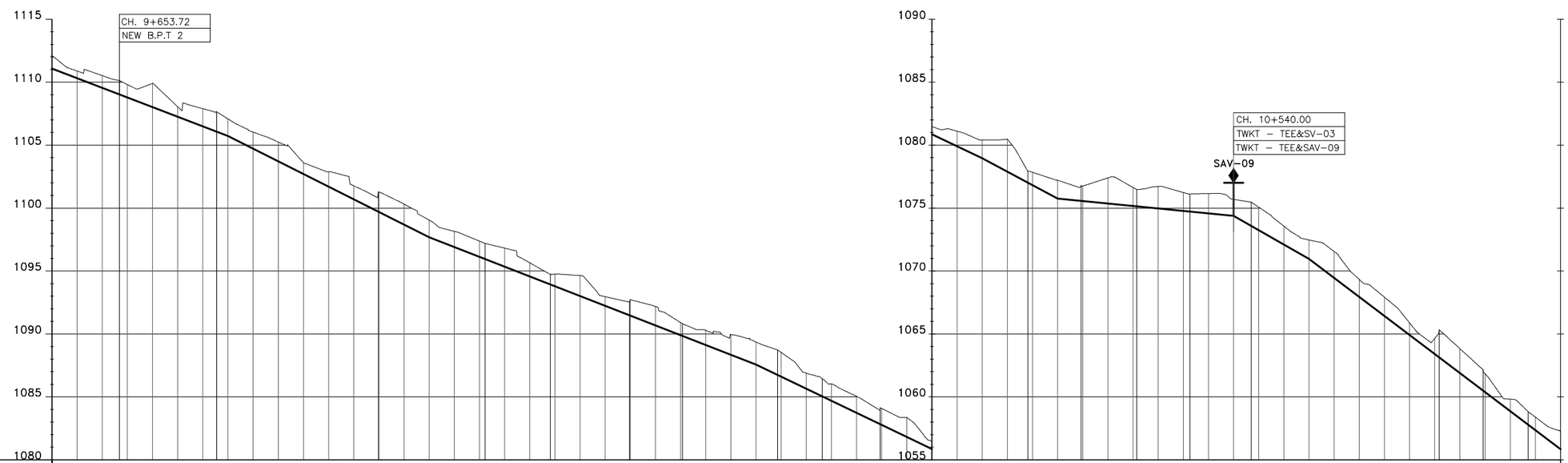

TYPE OF PIPE AND SIZE	DN 160mm HDPE PIPE - PE 100 SDR 11 (PN 16)
GEOLOGICAL CONDITION	RED LOAM SOIL

CHAINAGE (m)	EXISTING GROUND LEVEL (m)	INVERT LEVELS (m)	DEPTH OF INVERT (m)
9+600.00	1112.12	1111.08	1.05
9+620.00	1110.88	1110.31	0.57
9+640.00	1110.52	1109.55	0.97
9+653.72	1110.13	1109.02	1.11
9+660.00	1109.81	1108.78	1.02
9+680.00	1109.91	1108.02	1.89
9+700.00	1108.05	1107.25	0.79
9+720.00	1107.89	1106.49	1.40
9+730.93	1107.64	1106.07	1.57
9+740.00	1107.08	1105.73	1.35
9+760.00	1106.03	1104.72	1.31
9+780.00	1105.25	1103.71	1.53
9+800.00	1103.61	1102.71	0.90
9+820.00	1102.88	1101.70	1.18
9+840.00	1101.77	1100.70	1.07
9+859.75	1101.30	1099.70	1.59
9+860.00	1101.29	1099.69	1.60
9+880.00	1100.31	1098.69	1.63
9+900.00	1099.04	1097.68	1.36
9+920.00	1098.15	1096.90	1.25
9+940.00	1097.38	1096.12	1.25
9+944.51	1097.19	1095.95	1.24
9+960.00	1096.82	1095.34	1.47
9+980.00	1095.66	1094.57	1.09
9+996.37	1094.74	1093.93	0.81
10+000.00	1094.75	1093.79	0.96
10+020.00	1094.64	1093.01	1.63
10+040.00	1092.96	1092.23	0.73
10+059.37	1092.53	1091.48	1.05
10+060.00	1092.72	1091.45	1.27
10+080.00	1092.18	1090.67	1.51
10+100.00	1090.90	1089.89	1.01
10+101.44	1090.81	1089.84	0.98
10+120.00	1090.29	1089.12	1.17
10+140.00	1089.95	1088.34	1.61
10+160.00	1089.36	1087.56	1.80
10+177.14	1088.72	1086.74	1.98
10+180.00	1088.54	1086.60	1.94
10+200.00	1086.88	1085.65	1.23
10+212.79	1086.43	1085.03	1.40
10+220.00	1086.03	1084.69	1.34
10+240.00	1085.04	1083.73	1.31
10+258.82	1084.14	1082.83	1.31
10+260.00	1084.08	1082.78	1.31
10+280.00	1083.36	1081.82	1.54
10+300.00	1081.48	1080.86	0.62
10+320.00	1081.11	1079.91	1.20
10+340.00	1080.42	1078.95	1.47
10+360.00	1080.48	1077.89	2.59
10+376.28	1077.94	1077.02	0.92
10+380.00	1077.84	1076.82	1.02
10+400.00	1077.21	1075.76	1.45
10+418.58	1076.75	1075.57	1.18
10+420.00	1076.75	1075.56	1.19
10+440.00	1077.39	1075.36	2.03
10+460.00	1076.63	1075.17	1.47
10+462.99	1076.46	1075.14	1.33
10+480.00	1076.72	1074.97	1.75
10+500.00	1076.23	1074.77	1.46
10+505.26	1076.08	1074.72	1.36
10+520.00	1076.15	1074.57	1.58
10+540.00	1075.69	1074.38	1.31
10+554.03	1075.46	1073.58	1.88
10+560.00	1075.07	1073.24	1.83
10+580.00	1073.56	1072.10	1.46
10+600.00	1072.46	1070.96	1.51
10+620.00	1071.55	1069.44	2.10
10+640.00	1069.32	1067.93	1.39
10+660.00	1067.91	1066.42	1.49
10+680.00	1065.87	1064.91	0.96
10+700.00	1064.65	1063.40	1.25
10+703.60	1065.32	1063.12	2.20
10+720.00	1063.83	1061.88	1.95
10+738.41	1062.15	1060.49	1.66
10+740.00	1061.84	1060.37	1.47
10+760.00	1059.82	1058.86	0.96
10+774.30	1058.82	1057.78	1.04
10+780.00	1058.39	1057.35	1.04
10+800.00	1057.25	1055.83	1.42

SLOPE OF PIPE (H/V): –1:56.53 | –1:26.17 | –1:19.89 | –1:25.69 | –1:20.91 | –1:18.80 | –1:101.43 | –1:17.54 | –1:13.23 | –1:9.84

REFERENCE PEG NO.: TP 140, TP 141, TP 142, TP 143, TP 144, TP 145, TP 146, TP 147, TP 148, TP 149, TP 150, TP 151, TP 152, TP 153, TP 154, TP 155, TP 156, TP 157

LONGITUDINAL SECTION

0 100 200m

NOTES:

1. CONTOUR LEVELS ARE IN METERS AT TWO METER INTERVALS
2. GRID VALUES ARE IN METERS AT 200 METER INTERVALS
3. GEOLOGICAL CONDITIONS INDICATED ON DRAWING ARE FOR GENERAL GUIDANCE ONLY
4. MINIMUM PIPELINE SLOPES TO BE 1:200
5. DRAWING TO BE READ IN CONJUCTION WITH STANDARD DRAWINGS

LEGEND:

- ROAD (TARMAC)
- ROAD / TRACK (EARTH / MURRAM)
- FENCE / HEDGE
- 1480 CONTOURS
- ELECTRIC POST
- CULVERT
- GATE
- TEMPORARY STRUCTURES
- BUILDINGS
- PROPOSED TREATED WATER GRAVITY MAIN
- TP10 TRAVERSE POINT & No.
- TRIAL HOLE
- 30° HORIZONTAL BEND (H) OR VERTICAL BEND (V) WITH ANGLE INDICATED
- RIVER/STREAM
- V.J. VIKING JOHNSON
- GV GATE VALVE
- SV-01 SECTIONAL VALVE & No.
- WO-01 WASHOUT VALVE & No.
- SAV-01 AIR VALVE & No.
- WM WATER METER
- PROPOSED MASONRY CHAMBER
- PROPOSED VALVE BOX
- n PIPELINE GRADIENT WITH SLOPE DIRECTION (SLOPE MIN. OR 1 IN n)

ISSUED FOR CONSTRUCTION

REVISIONS		SIGN	DATE	APPROVED
	BY			
	CHECKED			
	BY			
	CHECKED			
	BY			
	CHECKED			
	BY			
	CHECKED			

CLIENT:
THE CHIEF EXECUTIVE OFFICER
TANA WATER WORKS DEVELOPMENT AGENCY
P.O BOX 1292 - 10100,
NYERI, KENYA

CONSULTING ENGINEERS:
MANGAT I.B PATEL(MIBP) LIMITED
P.O BOX 48674,00100-GPO,
NAIROBI, KENYA
E-MAIL: mibp.nairobi@mibp.co.ke
TEL: +254-20-2710500

PROJECT TITLE:
KENYA TOWNS SUSTAINABLE WATER SUPPLY AND SANITATION PROGRAM

CONTRACT No.TWSB/ADB/003/2019-2020
CONSTRUCTION OF CHUKA AND CHOGORIA WATER SUPPLY AND SANITATION PROJECT

LOT 1: CHUKA WATER SUPPLY

DRAWING TITLE:
TREATED WATER GRAVITY MAIN KATHWANA LINE
PLAN & LONGITUDINAL SECTION
CH. 9+600.00 - 10+800.00
SHEET 9 OF 26

Designed by:	A.M.I	Drawn by:	P.W.K
Checked by:	N.J.N	Approved by:	N.J.N
Scale:	H- 1:4000, V- 1:400	Date:	FEB 2024

DRG No. M407/CK/TWKT/09 REV

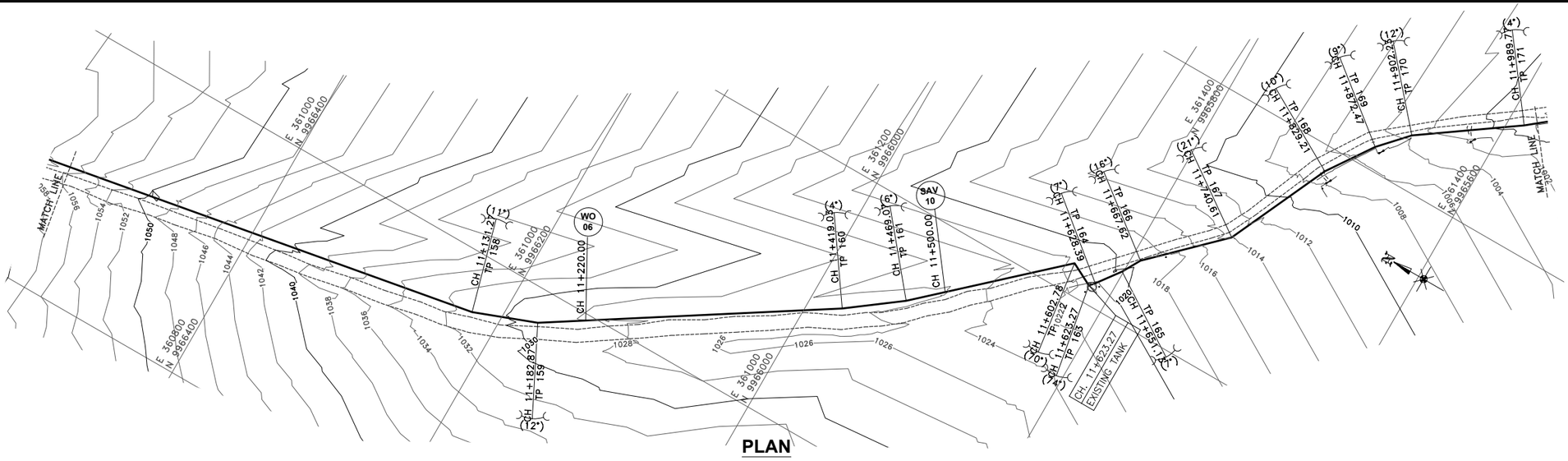

PLAN

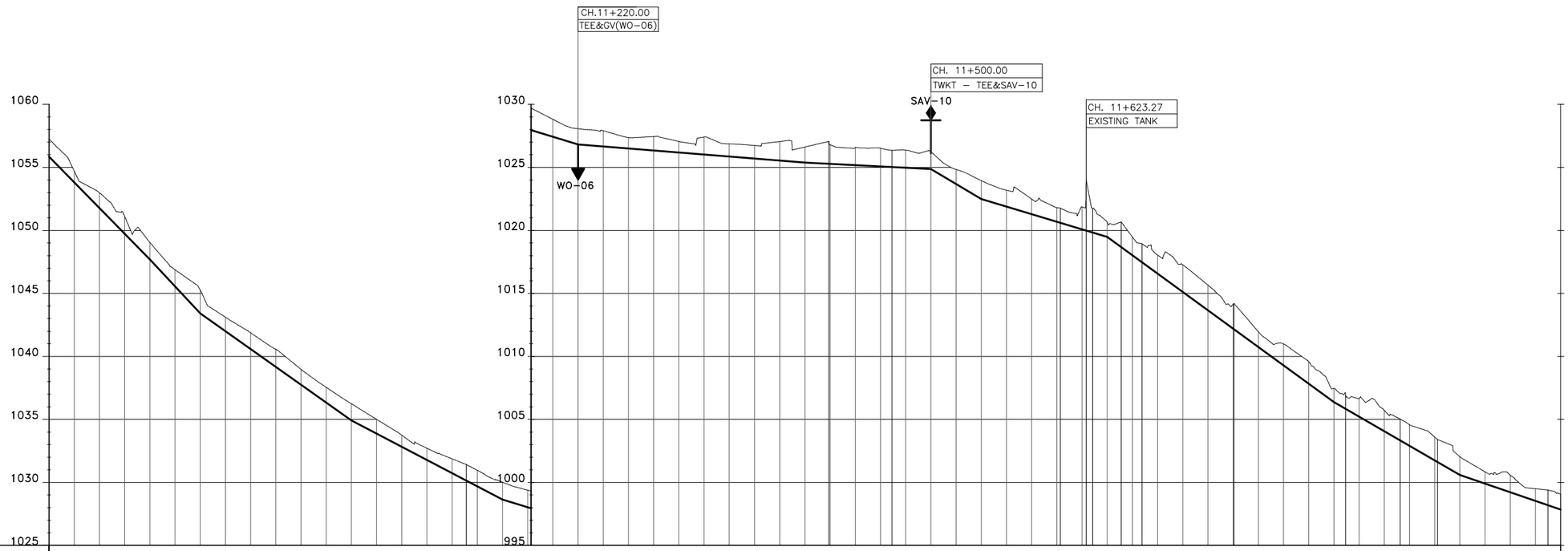

TYPE OF PIPE AND SIZE: DN 160mm HDPE PIPE - PE 100 SDR 11 (PN 16)

GEOLOGICAL CONDITION: RED LOAM SOIL

CHAINAGE (m)	EXISTING GROUND LEVEL (m)	INVERT LEVELS (m)	DEPTH OF INVERT (m)
10+800.00	1057.25	1055.83	1.42
10+820.00	1054.70	1053.80	0.90
10+840.00	1052.98	1051.77	1.22
10+860.00	1051.12	1049.74	1.38
10+880.00	1049.04	1047.70	1.34
10+900.00	1046.87	1045.56	1.32
10+920.00	1045.27	1043.41	1.85
10+940.00	1043.11	1042.00	1.12
10+960.00	1041.88	1040.58	1.30
10+980.00	1040.56	1039.16	1.40
11+000.00	1038.98	1037.75	1.23
11+020.00	1037.55	1036.33	1.22
11+040.00	1036.24	1034.91	1.33
11+060.00	1035.00	1033.87	1.14
11+080.00	1033.75	1032.82	0.93
11+100.00	1032.71	1031.78	0.94
11+120.00	1031.87	1030.73	1.14
11+131.27	1031.42	1030.14	1.27
11+140.00	1030.96	1029.69	1.27
11+160.00	1030.01	1028.64	1.37
11+180.00	1029.38	1028.03	1.35
11+182.87	1029.69	1027.95	1.74
11+200.00	1028.81	1027.43	1.38
11+220.00	1028.07	1026.82	1.24
11+240.00	1027.90	1026.66	1.24
11+260.00	1027.36	1026.50	0.86
11+280.00	1027.44	1026.34	1.10
11+300.00	1027.05	1026.18	0.87
11+320.00	1027.40	1026.02	1.39
11+340.00	1026.86	1025.86	1.01
11+360.00	1026.74	1025.70	1.04
11+380.00	1027.05	1025.54	1.52
11+400.00	1026.61	1025.37	1.24
11+419.03	1027.06	1025.28	1.78
11+420.00	1026.80	1025.27	1.52
11+440.00	1026.58	1025.17	1.41
11+460.00	1026.51	1025.07	1.44
11+469.07	1026.35	1025.03	1.32
11+480.00	1026.36	1024.97	1.39
11+500.00	1026.23	1024.87	1.35
11+520.00	1024.84	1023.68	1.15
11+540.00	1023.95	1022.49	1.46
11+560.00	1023.19	1021.89	1.31
11+580.00	1022.49	1021.28	1.21
11+600.00	1021.80	1020.68	1.12
11+602.78	1021.77	1020.60	1.17
11+620.00	1021.86	1020.08	1.78
11+623.27	1023.98	1019.98	4.00
11+628.39	1021.75	1019.87	1.87
11+640.00	1020.65	1019.47	1.17
11+651.13	1020.67	1018.66	2.01
11+660.00	1019.48	1018.02	1.46
11+667.62	1018.94	1017.46	1.47
11+680.00	1018.04	1016.56	1.48
11+700.00	1017.27	1015.11	2.16
11+720.00	1015.65	1013.65	2.00
11+740.00	1014.14	1012.20	1.94
11+740.61	1014.21	1012.15	2.06
11+760.00	1011.96	1010.74	1.22
11+780.00	1010.98	1009.28	1.70
11+800.00	1009.59	1007.83	1.76
11+820.00	1007.46	1006.37	1.09
11+829.21	1006.93	1005.84	1.09
11+840.00	1006.67	1005.22	1.45
11+860.00	1005.71	1004.06	1.65
11+872.47	1005.02	1003.34	1.68
11+880.00	1004.58	1002.91	1.67
11+900.00	1003.59	1001.75	1.84
11+902.23	1003.40	1001.62	1.77
11+920.00	1002.04	1000.60	1.44
11+940.00	1000.84	999.91	0.93
11+960.00	1000.58	999.22	1.36
11+980.00	999.50	998.54	0.96
11+989.77	999.40	998.20	1.20
12+000.00	999.07	997.85	1.22

SLOPE OF PIPE (H/V): −1:13.23 | −1:9.84 | −1:9.33 | −1:14.12 | −1:19.12 | −1:33.03 | −1:124.24 | −1:199.53 | −1:16.78 | −1:33.16 | −1:13.74 | −1:17.31 | −1:29.12 | −1:28.09

REFERENCE PEG NO.: TP 158, TP 159, TP 160, TP 161, TP 162, TP 163, TP 164, TP 165, TP 166, TP 167, TP 168, TP 169, TP 170, TP 171

LONGITUDINAL SECTION

0 100 200m

NOTES:

1. CONTOUR LEVELS ARE IN METERS AT TWO METER INTERVALS
2. GRID VALUES ARE IN METERS AT 200 METER INTERVALS
3. GEOLOGICAL CONDITIONS INDICATED ON DRAWING ARE FOR GENERAL GUIDANCE ONLY
4. MINIMUM PIPELINE SLOPES TO BE 1:200
5. DRAWING TO BE READ IN CONJUCTION WITH STANDARD DRAWINGS

LEGEND:

- ROAD (TARMAC)
- ROAD / TRACK (EARTH / MURRAM)
- FENCE / HEDGE
- 1480 CONTOURS
- ELECTRIC POST
- CULVERT
- GATE
- TEMPORARY STRUCTURES
- BUILDINGS
- PROPOSED TREATED WATER GRAVITY MAIN
- TP10 TRAVERSE POINT & No.
- TRIAL HOLE
- 30° HORIZONTAL BEND (H) OR VERTICAL BEND (V) WITH ANGLE INDICATED
- RIVER/STREAM
- V.J. VIKING JOHNSON
- GV GATE VALVE
- SV-01 SECTIONAL VALVE & No.
- WO-01 WASHOUT VALVE & No.
- SAV-01 AIR VALVE & No.
- WM WATER METER
- PROPOSED MASONRY CHAMBER
- PROPOSED VALVE BOX
- n PIPELINE GRADIENT WITH SLOPE DIRECTION (SLOPE MIN. OR 1 IN n)

ISSUED FOR CONSTRUCTION

REVISIONS		SIGN	DATE	APPROVED
	BY			
	CHECKED			
	BY			
	CHECKED			
	BY			
	CHECKED			
	BY			
	CHECKED			

CLIENT:
THE CHIEF EXECUTIVE OFFICER
TANA WATER WORKS DEVELOPMENT AGENCY
P.O BOX 1292 - 10100,
NYERI, KENYA

CONSULTING ENGINEERS:
MANGAT I.B PATEL(MIBP) LIMITED
P.O BOX 48674,00100-GPO,
NAIROBI, KENYA
E-MAIL: mibp.nairobi@mibp.co.ke
TEL: +254-20-2710500

PROJECT TITLE:
KENYA TOWNS SUSTAINABLE WATER SUPPLY AND SANITATION PROGRAM

CONTRACT No.TWSB/ADB/003/2019-2020

CONSTRUCTION OF CHUKA AND CHOGORIA WATER SUPPLY AND SANITATION PROJECT

LOT 1: CHUKA WATER SUPPLY

DRAWING TITLE:
TREATED WATER GRAVITY MAIN KATHWANA LINE PLAN & LONGITUDINAL SECTION CH. 10+800.00 - 12+000.00 SHEET 10 OF 26

Designed by:	A.M.I	Drawn by:	P.W.K
Checked by:	N.J.N	Approved by:	N.J.N
Scale:	H- 1:4000, V- 1:400	Date:	FEB 2024

DRG No. M407/CK/TWKT/10 REV

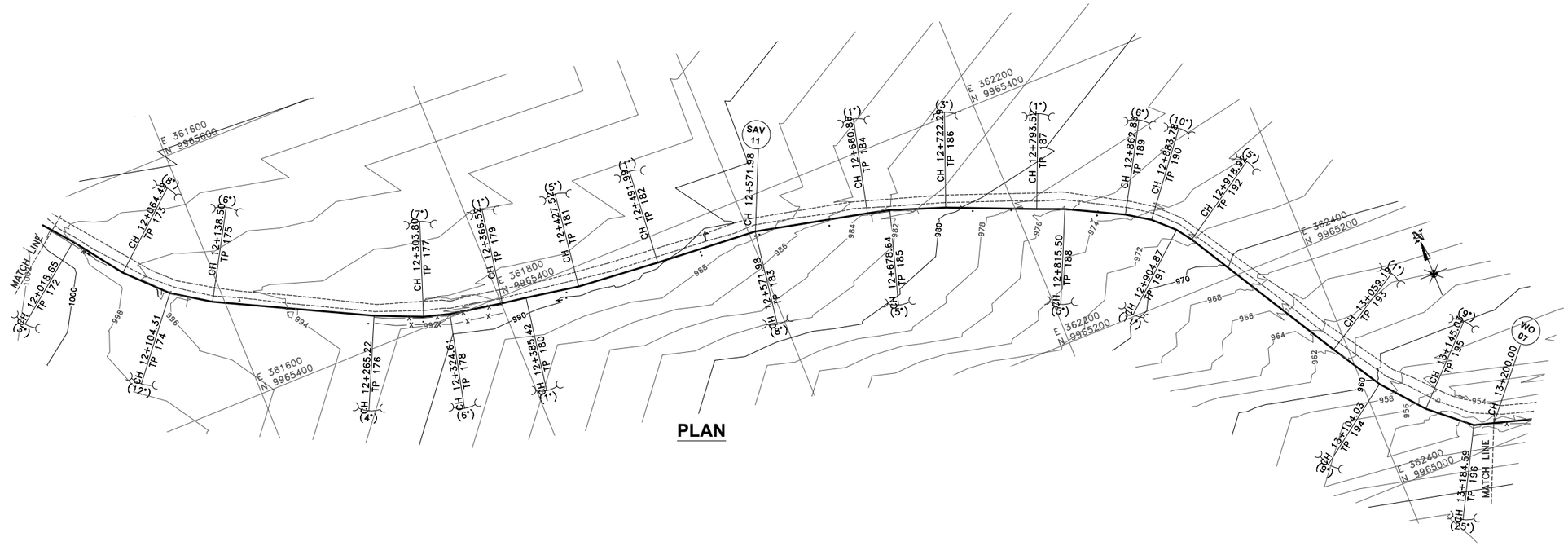

PLAN

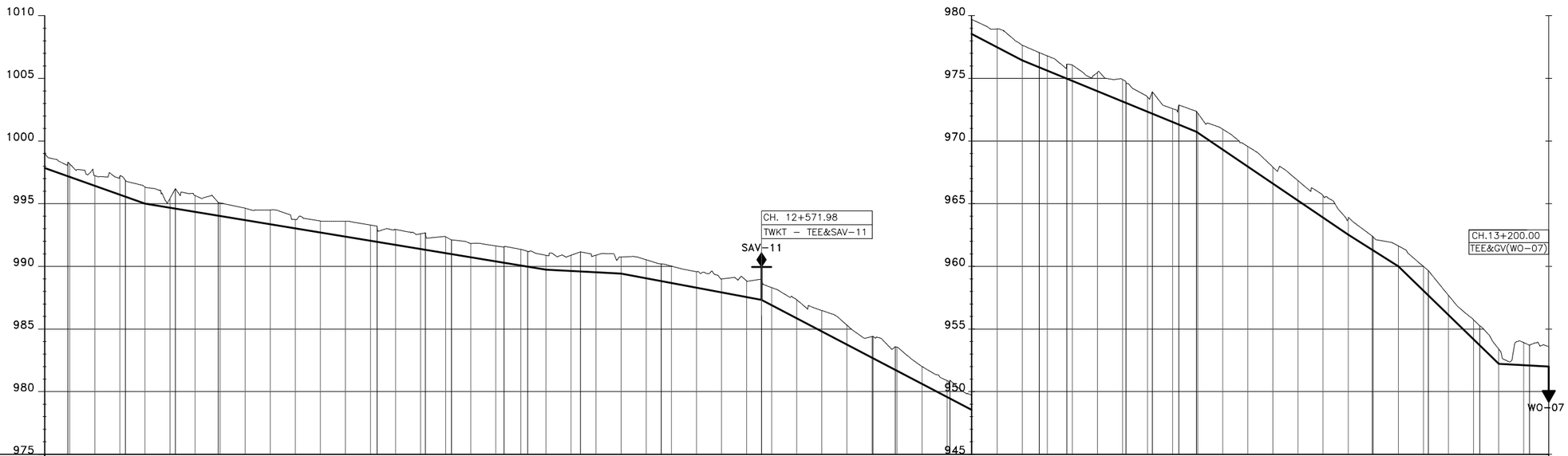

DATUM (m)

TYPE OF PIPE AND SIZE: DN 160mm HDPE PIPE - PE 100 SDR 11 (PN 16)

GEOLOGICAL CONDITION: RED LOAM SOIL

CHAINAGE (m)	EXISTING GROUND LEVEL (m)	INVERT LEVELS (m)	DEPTH OF INVERT (m)	REFERENCE PEG NO.
12+000.00	999.07	997.85	1.22	
12+018.65	998.32	997.18	1.13	TP 172
12+020.00	998.18	997.14	1.04	
12+040.00	997.24	996.42	0.82	
12+060.00	997.18	995.71	1.47	TP 173
12+064.49	996.85	995.55	1.30	
12+080.00	996.34	995.00	1.34	
12+100.00	995.41	994.67	0.74	TP 174
12+104.31	996.20	994.60	1.60	
12+120.00	995.65	994.34	1.31	
12+138.50	995.09	994.04	1.06	TP 175
12+140.00	995.06	994.01	1.05	
12+160.00	994.64	993.68	0.96	
12+180.00	994.50	993.35	1.15	
12+200.00	993.74	993.03	0.72	
12+220.00	993.62	992.70	0.93	
12+240.00	993.60	992.37	1.23	
12+260.00	993.30	992.04	1.26	TP 176
12+265.22	993.21	991.95	1.26	
12+280.00	992.95	991.71	1.24	
12+300.00	992.60	991.38	1.22	TP 177
12+303.80	992.67	991.32	1.35	
12+320.00	992.36	991.05	1.31	
12+324.61	992.11	990.98	1.14	TP 178
12+340.00	991.82	990.72	1.10	
12+360.00	991.63	990.39	1.24	TP 179
12+366.52	991.55	990.29	1.26	
12+380.00	991.35	990.06	1.29	
12+385.42	991.19	990.98	1.22	TP 180
12+400.00	990.88	989.74	1.15	
12+420.00	990.89	989.63	1.26	TP 181
12+427.52	991.16	989.59	1.57	
12+440.00	990.89	989.52	1.37	
12+460.00	990.74	989.42	1.33	
12+480.00	990.52	989.04	1.48	TP 182
12+491.99	990.20	988.82	1.38	
12+500.00	990.02	988.67	1.35	
12+520.00	989.57	988.30	1.28	TP 183
12+540.00	988.99	987.92	1.07	
12+560.00	988.84	987.55	1.29	
12+571.98	988.98	987.33	1.65	
12+580.00	988.91	986.91	1.40	
12+600.00	987.34	985.86	1.48	TP 184
12+620.00	986.48	984.81	1.67	
12+640.00	985.32	983.77	1.55	
12+660.00	984.39	982.72	1.67	TP 185
12+660.86	984.41	982.67	1.74	
12+678.64	983.58	981.74	1.84	
12+680.00	983.55	981.67	1.88	
12+700.00	982.00	980.62	1.38	
12+720.00	980.88	979.58	1.31	TP 186
12+722.29	980.91	978.46	1.46	
12+740.00	979.69	978.53	1.16	
12+760.00	978.94	977.48	1.46	
12+780.00	977.65	976.44	1.21	
12+793.52	977.06	975.88	1.18	TP 187
12+800.00	976.80	975.62	1.18	
12+815.50	976.14	974.98	1.16	
12+820.00	976.06	974.80	1.27	TP 188
12+840.00	975.48	973.98	1.50	
12+860.00	974.91	973.16	1.75	TP 189
12+862.83	974.67	973.04	1.63	
12+880.00	973.50	972.34	1.16	
12+883.78	973.93	972.18	1.75	TP 190
12+900.00	972.58	971.52	1.06	
12+904.87	972.87	971.32	1.55	TP 191
12+918.92	972.38	970.74	1.64	
12+920.00	972.23	970.67	1.56	TP 192
12+940.00	970.94	969.31	1.63	
12+960.00	969.56	967.96	1.60	
12+980.00	967.91	966.60	1.31	
13+000.00	966.84	965.25	1.59	
13+020.00	965.63	963.89	1.74	
13+040.00	963.79	962.53	1.26	
13+059.19	962.42	961.32	1.10	TP 193
13+060.00	962.34	961.27	1.07	
13+080.00	961.63	960.00	1.63	
13+100.00	960.00	958.06	1.94	TP 194
13+104.03	959.65	957.67	1.98	
13+120.00	957.69	956.12	1.57	
13+140.00	955.74	954.18	1.56	TP 195
13+145.03	955.25	953.69	1.56	
13+160.00	953.42	952.24	1.18	
13+160.20	953.39	952.22	1.17	
13+180.00	953.92	952.11	1.81	TP 196
13+184.59	953.71	952.09	1.62	
13+200.00	953.61	952.00	1.61	

SLOPE OF PIPE (H/V): −1:29.12, −1:28.09, −1:60.78, −1:187.97, −1:53.82, −1:19.10, −1:24.40, −1:14.75, −1:15.78, −1:10.31, −1:179.57, −1:76.43

LONGITUDINAL SECTION

0 100 200m

NOTES:

1. CONTOUR LEVELS ARE IN METERS AT TWO METER INTERVALS
2. GRID VALUES ARE IN METERS AT 200 METER INTERVALS
3. GEOLOGICAL CONDITIONS INDICATED ON DRAWING ARE FOR GENERAL GUIDANCE ONLY
4. MINIMUM PIPELINE SLOPES TO BE 1:200
5. DRAWING TO BE READ IN CONJUCTION WITH STANDARD DRAWINGS

LEGEND:

- ROAD (TARMAC)
- ROAD / TRACK (EARTH / MURRAM)
- FENCE / HEDGE
- 1480 CONTOURS
- ELECTRIC POST
- CULVERT
- GATE
- TEMPORARY STRUCTURES
- BUILDINGS
- PROPOSED TREATED WATER GRAVITY MAIN
- TP10 TRAVERSE POINT & No.
- TRIAL HOLE
- 30° HORIZONTAL BEND (H) OR VERTICAL BEND (V) WITH ANGLE INDICATED
- RIVER/STREAM
- V.J. VIKING JOHNSON
- GV GATE VALVE
- SV-01 SECTIONAL VALVE & No.
- WO-01 WASHOUT VALVE & No.
- SAV-01 AIR VALVE & No.
- WM WATER METER
- PROPOSED MASONRY CHAMBER
- PROPOSED VALVE BOX
- n PIPELINE GRADIENT WITH SLOPE DIRECTION (SLOPE MIN. OR 1 IN n)

ISSUED FOR CONSTRUCTION

REVISIONS		SIGN	DATE	APPROVED
	BY			
	CHECKED			
	BY			
	CHECKED			
	BY			
	CHECKED			
	BY			
	CHECKED			

CLIENT:
THE CHIEF EXECUTIVE OFFICER
TANA WATER WORKS DEVELOPMENT AGENCY
P.O BOX 1292 - 10100,
NYERI, KENYA

CONSULTING ENGINEERS:
MANGAT I.B PATEL(MIBP) LIMITED
P.O BOX 48674,00100-GPO,
NAIROBI, KENYA
E-MAIL: mibp.nairobi@mibp.co.ke
TEL: +254-20-2710500

PROJECT TITLE:
KENYA TOWNS SUSTAINABLE WATER SUPPLY AND SANITATION PROGRAM

CONTRACT No.TWSB/ADB/003/2019-2020
CONSTRUCTION OF CHUKA AND CHOGORIA WATER SUPPLY AND SANITATION PROJECT

LOT 1: CHUKA WATER SUPPLY

DRAWING TITLE:
TREATED WATER GRAVITY MAIN
KATHWANA LINE
PLAN & LONGITUDINAL SECTION
CH. 12+000.00 - 13+200.00
SHEET 11 OF 26

Designed by:	A.M.I	Drawn by:	P.W.K
Checked by:	N.J.N	Approved by:	N.J.N
Scale:	H- 1:4000, V- 1:400	Date:	FEB 2024

DRG No. M407/CK/TWKT/11 REV

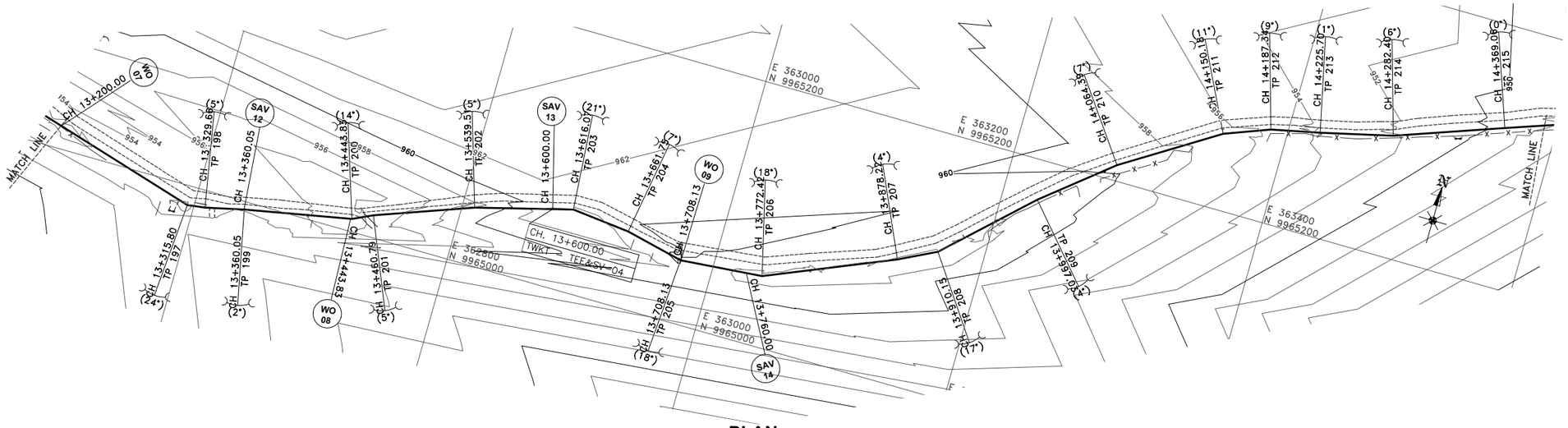

PLAN

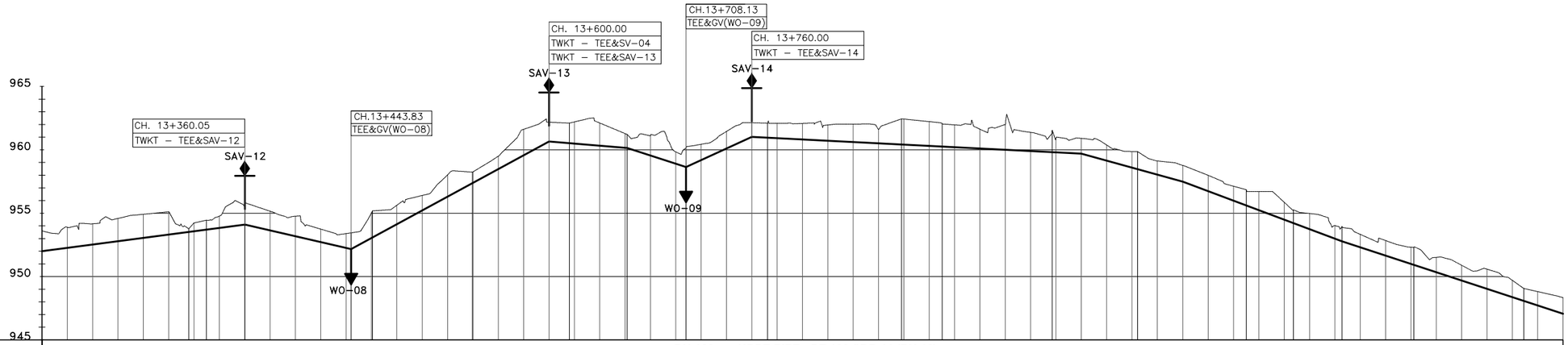

TP	CH	EXISTING GROUND LEVEL (m)	INVERT LEVELS (m)	DEPTH OF INVERT (m)
197	13+200.00	953.61	952.00	1.61
	13+220.00	953.89	952.26	1.63
	13+240.00	954.16	952.52	1.64
	13+260.00	954.59	952.78	1.80
	13+280.00	954.91	953.05	1.87
	13+300.00	955.11	953.31	1.80
	13+303.80	955.13	953.35	1.78
	13+320.00	954.23	953.57	0.66
198	13+329.66	954.45	953.70	0.75
	13+340.00	954.77	953.83	0.94
199	13+360.00	955.80	954.09	1.71
	13+360.05	955.83	954.09	1.73
	13+380.00	955.16	953.64	1.52
	13+400.00	954.76	953.18	1.59
	13+420.00	953.74	952.72	1.02
	13+440.00	953.39	952.26	1.13
200	13+443.83	953.45	952.17	1.27
	13+460.00	953.03	953.05	1.98
201	13+460.79	955.18	953.09	2.09
	13+480.00	955.63	954.14	1.49
	13+500.00	956.40	955.23	1.17
	13+520.00	958.03	956.31	1.71
202	13+539.51	958.24	957.37	0.87
	13+540.00	958.26	957.40	0.86
	13+560.00	959.50	958.49	1.01
	13+580.00	961.62	959.58	2.04
	13+600.00	962.18	960.66	1.52
203	13+616.07	962.11	960.53	1.58
	13+620.00	962.20	960.50	1.71
	13+640.00	962.12	960.33	1.79
204	13+660.00	961.29	960.16	1.12
	13+661.75	961.21	960.15	1.06
	13+680.00	961.15	959.56	1.59
205	13+700.00	959.84	958.91	0.93
	13+708.13	960.17	958.65	1.52
	13+720.00	960.44	959.19	1.25
	13+740.00	961.45	960.10	1.35
	13+760.00	962.14	961.02	1.13
206	13+772.42	962.10	960.95	1.15
	13+780.00	962.10	960.91	1.18
	13+800.00	962.09	960.81	1.27
	13+820.00	961.96	960.71	1.25
	13+840.00	962.04	960.61	1.43
	13+860.00	961.60	960.51	1.09
207	13+878.22	962.45	960.42	2.03
	13+880.00	962.43	960.41	2.03
	13+900.00	962.23	960.30	1.92
208	13+910.15	962.04	960.25	1.79
	13+920.00	961.97	960.20	1.77
	13+940.00	961.63	960.10	1.53
	13+960.00	961.98	960.00	1.98
	13+980.00	961.38	959.90	1.48
209	13+997.03	961.54	959.81	1.73
	14+000.00	960.91	959.80	1.11
	14+020.00	960.91	959.70	1.21
	14+040.00	960.38	959.15	1.24
	14+060.00	959.87	958.59	1.28
	14+064.39	959.86	958.47	1.39
	14+080.00	959.12	958.04	1.08
	14+100.00	958.77	957.49	1.28
	14+120.00	957.99	956.74	1.25
	14+140.00	957.13	955.99	1.14
	14+150.18	956.85	955.61	1.24
	14+160.00	956.71	955.24	1.46
	14+180.00	955.87	954.49	1.37
	14+187.34	955.25	954.22	1.03
	14+200.00	954.98	953.74	1.23
	14+220.00	954.02	952.99	1.03
	14+225.70	953.96	952.78	1.18
	14+240.00	953.33	952.31	1.02
	14+260.00	952.84	951.66	1.19
	14+280.00	952.32	951.00	1.32
	14+282.40	952.30	950.92	1.37
	14+300.00	951.51	950.34	1.17
	14+320.00	950.89	949.69	1.20
	14+340.00	950.58	949.03	1.55
	14+360.00	949.70	948.38	1.32
	14+369.06	949.06	948.08	0.98
	14+380.00	948.81	947.72	1.09
	14+400.00	948.33	947.07	1.27

TYPE OF PIPE AND SIZE: DN 160mm HDPE PIPE - PE 100 SDR 11 (PN 16)

GEOLOGICAL CONDITION: RED LOAM SOIL

SLOPE OF PIPE (H/V): −1:179.36 | 1:76.43 | −1:43.62 | 1:18.39 | −1:120.37 | −1:30.86 | 1:21.89 | −1:196.94 | −1:36.35 | −1:26.66 | −1:30.50 | −1:62.71

REFERENCE PEG NO.: TP 197, TP 198, TP 199, TP 200, TP 201, TP 202, TP 203, TP 204, TP 205, TP 206, TP 207, TP 208, TP 209, TP 210, TP 211, TP 212, TP 213, TP 214, TP 215

LONGITUDINAL SECTION

0 100 200m

NOTES:

1. CONTOUR LEVELS ARE IN METERS AT TWO METER INTERVALS
2. GRID VALUES ARE IN METERS AT 200 METER INTERVALS
3. GEOLOGICAL CONDITIONS INDICATED ON DRAWING ARE FOR GENERAL GUIDANCE ONLY
4. MINIMUM PIPELINE SLOPES TO BE 1:200
5. DRAWING TO BE READ IN CONJUCTION WITH STANDARD DRAWINGS

LEGEND:

- ROAD (TARMAC)
- ROAD / TRACK (EARTH / MURRAM)
- FENCE / HEDGE
- 1480 CONTOURS
- ELECTRIC POST
- CULVERT
- GATE
- TEMPORARY STRUCTURES
- BUILDINGS
- PROPOSED TREATED WATER GRAVITY MAIN
- TP10 TRAVERSE POINT & No.
- TRIAL HOLE
- 30° HORIZONTAL BEND (H) OR VERTICAL BEND (V) WITH ANGLE INDICATED
- RIVER/STREAM
- V.J. VIKING JOHNSON
- GV GATE VALVE
- SV-01 SECTIONAL VALVE & No.
- WO-01 WASHOUT VALVE & No.
- SAV-01 AIR VALVE & No.
- WM WATER METER
- PROPOSED MASONRY CHAMBER
- PROPOSED VALVE BOX
- n PIPELINE GRADIENT WITH SLOPE DIRECTION (SLOPE MIN. OR 1 IN n)

ISSUED FOR CONSTRUCTION

REVISIONS		SIGN	DATE	APPROVED
	BY			
	CHECKED			
	BY			
	CHECKED			
	BY			
	CHECKED			
	BY			
	CHECKED			

CLIENT: THE CHIEF EXECUTIVE OFFICER
TANA WATER WORKS DEVELOPMENT AGENCY
P.O BOX 1292 - 10100,
NYERI, KENYA

CONSULTING ENGINEERS:
MANGAT I.B PATEL(MIBP) LIMITED
P.O BOX 48674,00100-GPO,
NAIROBI, KENYA
E-MAIL: mibp.nairobi@mibp.co.ke
TEL: +254-20-2710500

PROJECT TITLE:
KENYA TOWNS SUSTAINABLE WATER SUPPLY AND SANITATION PROGRAM

CONTRACT No.TWSB/ADB/003/2019-2020

CONSTRUCTION OF CHUKA AND CHOGORIA WATER SUPPLY AND SANITATION PROJECT

LOT 1: CHUKA WATER SUPPLY

DRAWING TITLE:
TREATED WATER GRAVITY MAIN KATHWANA LINE PLAN & LONGITUDINAL SECTION CH. 13+200.00 - 14+400.00 SHEET 12 OF 26

Designed by:	A.M.I	Drawn by:	P.W.K
Checked by:	N.J.N	Approved by:	N.J.N
Scale:	H- 1:4000, V- 1:400	Date:	FEB 2024

DRG No. M407/CK/TWKT/12 REV

PLAN

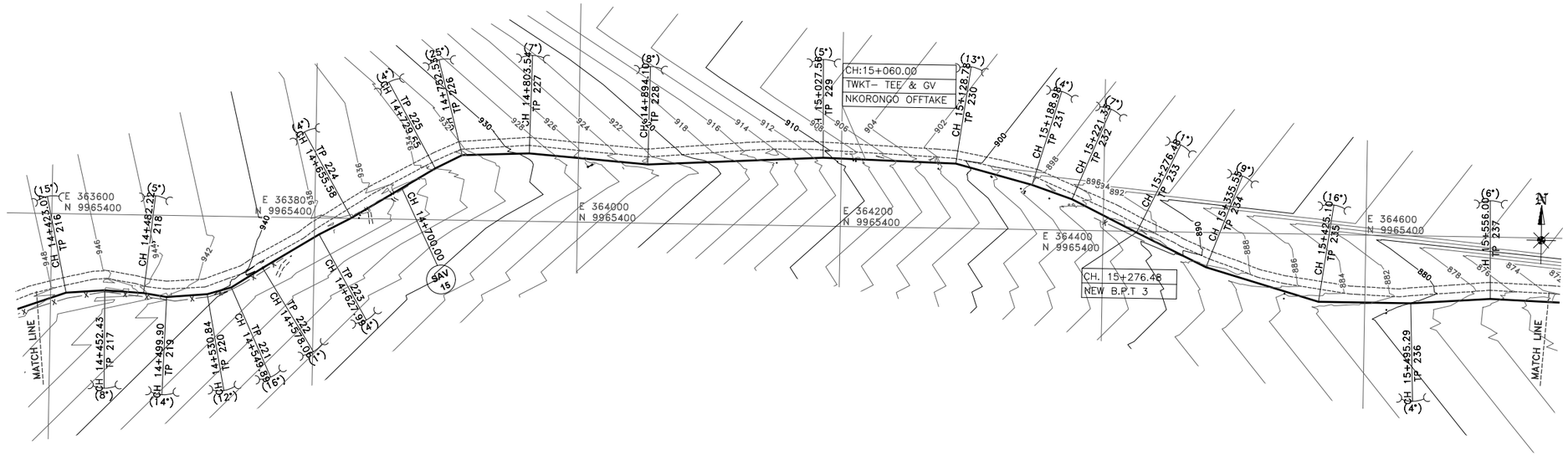

NOTES:

1. CONTOUR LEVELS ARE IN METERS AT TWO METER INTERVALS
2. GRID VALUES ARE IN METERS AT 200 METER INTERVALS
3. GEOLOGICAL CONDITIONS INDICATED ON DRAWING ARE FOR GENERAL GUIDANCE ONLY
4. MINIMUM PIPELINE SLOPES TO BE 1:200
5. DRAWING TO BE READ IN CONJUCTION WITH STANDARD DRAWINGS

LEGEND:

	ROAD (TARMAC)
	ROAD / TRACK (EARTH / MURRAM)
	FENCE / HEDGE
1480	CONTOURS
○	ELECTRIC POST
	CULVERT
	GATE
▨	TEMPORARY STRUCTURES
☐	BUILDINGS
	PROPOSED TREATED WATER GRAVITY MAIN
TP10	TRAVERSE POINT & No.
⊗	TRIAL HOLE
30°	HORIZONTAL BEND (H) OR VERTICAL BEND (V) WITH ANGLE INDICATED
	RIVER/STREAM
V.J.	VIKING JOHNSON
GV	GATE VALVE
SV-01	SECTIONAL VALVE & No.
WO-01	WASHOUT VALVE & No.
SAV-01	AIR VALVE & No.
WM	WATER METER
	PROPOSED MASONRY CHAMBER
	PROPOSED VALVE BOX
n	PIPELINE GRADIENT WITH SLOPE DIRECTION (SLOPE MIN. OR 1 IN n)

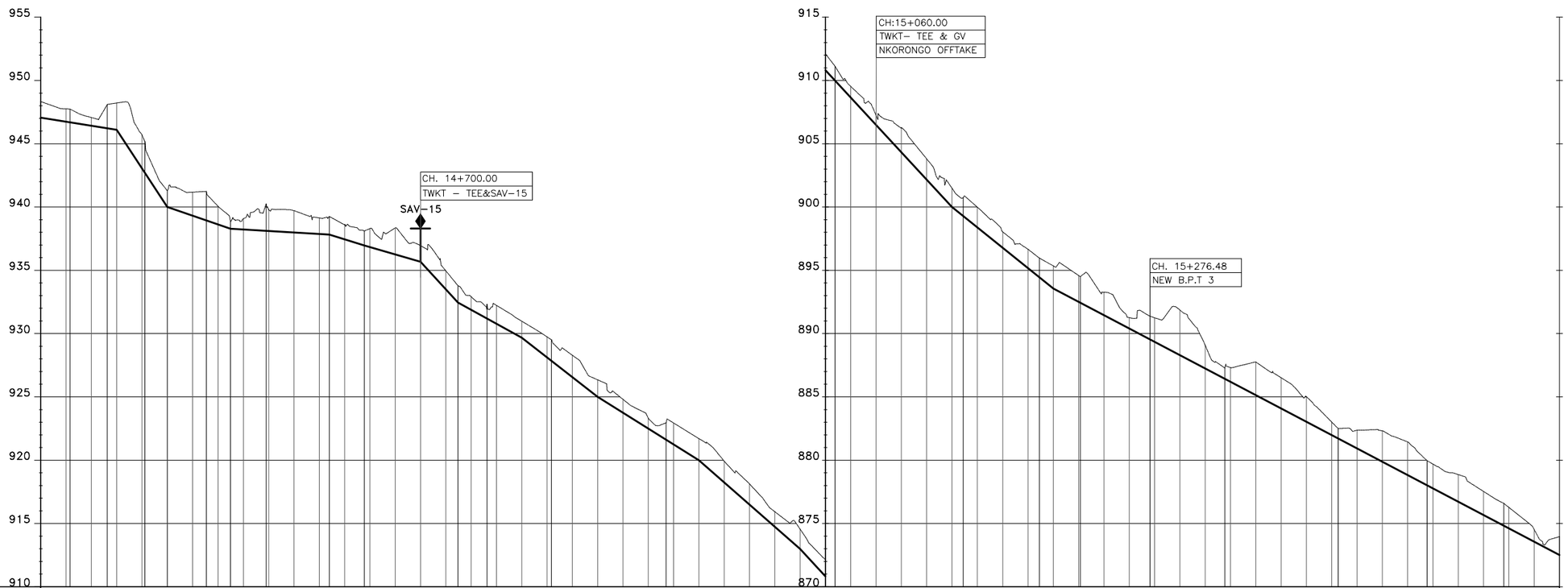

DATUM (m)

TYPE OF PIPE AND SIZE: DN 160mm HDPE PIPE - PE 100 SDR 11 (PN 16)

GEOLOGICAL CONDITION: RED LOAM SOIL

CHAINAGE (m)	EXISTING GROUND LEVEL (m)	INVERT LEVELS (m)	DEPTH OF INVERT (m)	SLOPE OF PIPE (H/V)	REFERENCE PEG NO.
14+400.00	948.33	947.07	1.27	−1:30.50 −1:62.71	
14+420.00	947.75	946.75	1.01		
14+423.07	947.74	946.70	1.04		TP 216
14+440.00	947.07	946.43	0.64		
14+452.43	948.09	946.23	1.86		TP 217
14+460.00	948.22	946.11	2.11	−1:6.53	
14+480.00	945.68	943.05	2.64		
14+482.22	945.18	942.71	2.48		TP 218
14+499.90	941.30	940.00	1.30		TP 219
14+500.00	941.31	940.00	1.32	−1:29.18	
14+520.00	941.17	939.31	1.86		
14+530.84	941.24	938.94	2.30		TP 220
14+540.00	940.06	938.63	1.44		
14+549.89	938.81	938.29	0.53		TP 221
14+560.00	939.07	938.23	0.84	−1:169.13	
14+578.06	940.24	938.12	2.13		TP 222
14+580.00	939.80	938.11	1.69		
14+600.00	939.71	937.99	1.72		
14+620.00	939.14	937.87	1.27		
14+627.99	939.24	937.82	1.41	−1:31.81	TP 223
14+640.00	938.59	937.45	1.14		
14+655.58	938.11	936.96	1.15	−1:34.57	TP 224
14+660.00	938.29	936.83	1.46		
14+680.00	938.35	936.25	2.09		
14+700.00	936.95	935.67	1.28	−1:9.23	
14+720.00	934.96	933.51	1.46		
14+729.65	933.78	932.46	1.32	−1:18.05	TP 225
14+740.00	932.92	931.89	1.03		
14+752.53	932.32	931.19	1.13		TP 226
14+760.00	932.23	930.78	1.45		
14+780.00	930.98	929.67	1.31	−1:12.85	
14+800.00	929.74	928.11	1.63		
14+803.54	929.51	927.84	1.67		TP 227
14+820.00	928.29	926.56	1.73		
14+840.00	926.35	925.00	1.35	−1:16.00	
14+860.00	924.81	923.75	1.06		
14+880.00	923.31	922.50	0.81		
14+894.10	922.95	921.62	1.33		TP 228
14+900.00	922.94	921.25	1.69		
14+920.00	921.70	920.00	1.70	−1:11.40	
14+940.00	919.92	918.25	1.68		
14+960.00	918.12	916.49	1.63		
14+980.00	915.93	914.74	1.19		
15+000.00	914.54	912.98	1.56	−1:9.24	
15+020.00	912.10	910.82	1.28		
15+027.56	911.12	910.00	1.12		TP 229
15+040.00	909.52	908.65	0.87		
15+060.00	907.24	906.49	0.75		
15+080.00	906.28	904.33	1.95		
15+100.00	903.80	902.16	1.64		
15+120.00	901.48	900.00	1.48	−1:12.43	
15+128.78	900.73	899.29	1.43		TP 230
15+140.00	899.98	898.39	1.59		
15+160.00	898.04	896.78	1.25		
15+180.00	896.67	895.17	1.49		
15+188.98	895.97	894.45	1.51		TP 231
15+200.00	895.35	893.57	1.79	−1:19.00	
15+220.00	894.59	892.51	2.08		
15+221.33	894.50	892.44	2.06		TP 232
15+240.00	893.27	891.46	1.81		
15+260.00	891.26	890.41	0.86		
15+276.48	891.37	889.54	1.83		TP 233
15+280.00	891.25	889.36	1.90		
15+300.00	891.87	888.30	3.56		
15+320.00	889.09	887.25	1.84		
15+335.55	887.28	886.43	0.85		TP 234
15+340.00	887.32	886.20	1.12		
15+360.00	887.76	885.15	2.61		
15+380.00	886.52	884.09	2.42		
15+400.00	885.02	883.04	1.98		
15+420.00	883.01	881.99	1.02		
15+425.10	882.50	881.72	0.78		TP 235
15+440.00	882.38	880.94	1.44		
15+460.00	882.32	879.88	2.43		
15+480.00	881.44	878.83	2.61		
15+495.29	879.97	878.03	1.94		TP 236
15+500.00	879.69	877.78	1.91		
15+520.00	878.86	876.73	2.14		
15+540.00	877.53	875.67	1.86		
15+556.00	876.58	874.83	1.75		TP 237
15+560.00	876.27	874.62	1.65		
15+580.00	874.52	873.57	0.96		
15+600.00	873.96	872.51	1.44	−1:11.90	

LONGITUDINAL SECTION

0 100 200m

ISSUED FOR CONSTRUCTION

REVISIONS	SIGN	DATE	APPROVED
	BY		
	CHECKED		
	BY		
	CHECKED		
	BY		
	CHECKED		
	BY		
	CHECKED		

CLIENT:
THE CHIEF EXECUTIVE OFFICER
TANA WATER WORKS
DEVELOPMENT AGENCY
P.O BOX 1292 - 10100,
NYERI, KENYA

CONSULTING ENGINEERS:
MANGAT I.B PATEL(MIBP) LIMITED
P.O BOX 48674,00100-GPO,
NAIROBI, KENYA
E-MAIL: mibp.nairobi@mibp.co.ke
TEL: +254-20-2710500

PROJECT TITLE:
KENYA TOWNS SUSTAINABLE WATER SUPPLY AND SANITATION PROGRAM

CONTRACT No.TWSB/ADB/003/2019-2020
CONSTRUCTION OF CHUKA AND CHOGORIA WATER SUPPLY AND SANITATION PROJECT

LOT 1: CHUKA WATER SUPPLY

DRAWING TITLE:
TREATED WATER GRAVITY MAIN
KATHWANA LINE
PLAN & LONGITUDINAL SECTION
CH. 14+400.00 - 15+600.00
SHEET 13 OF 26

Designed by: A.M.I	Drawn by: P.W.K
Checked by: N.J.N	Approved by: N.J.N
Scale: H- 1:4000, V- 1:400	Date: FEB 2024
DRG No. M407/CK/TWKT/13	REV

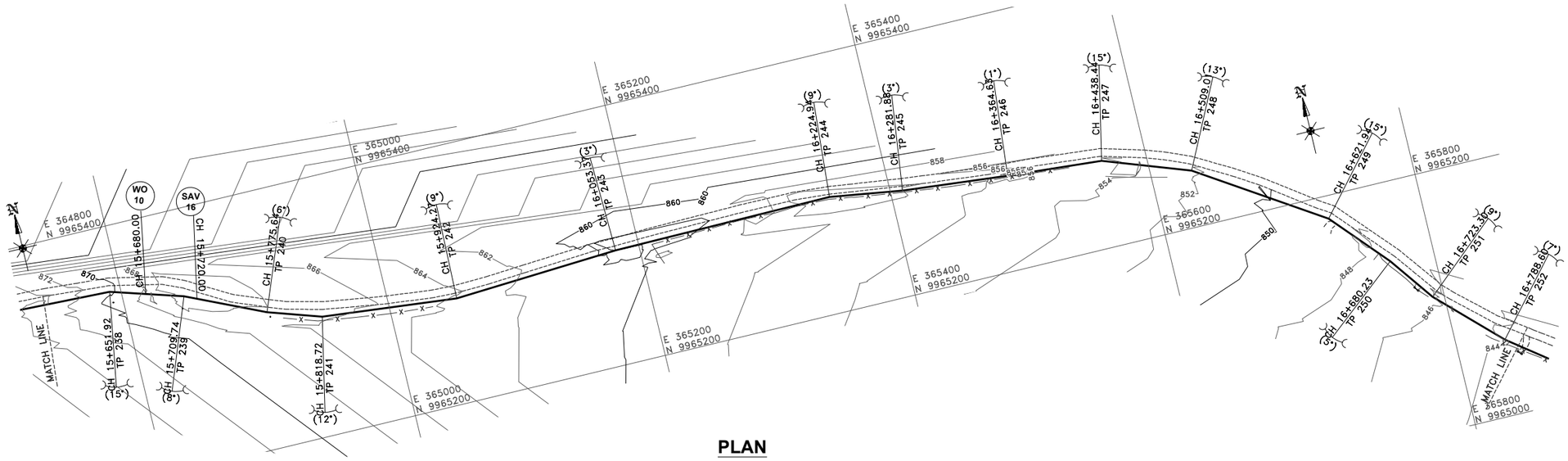

PLAN

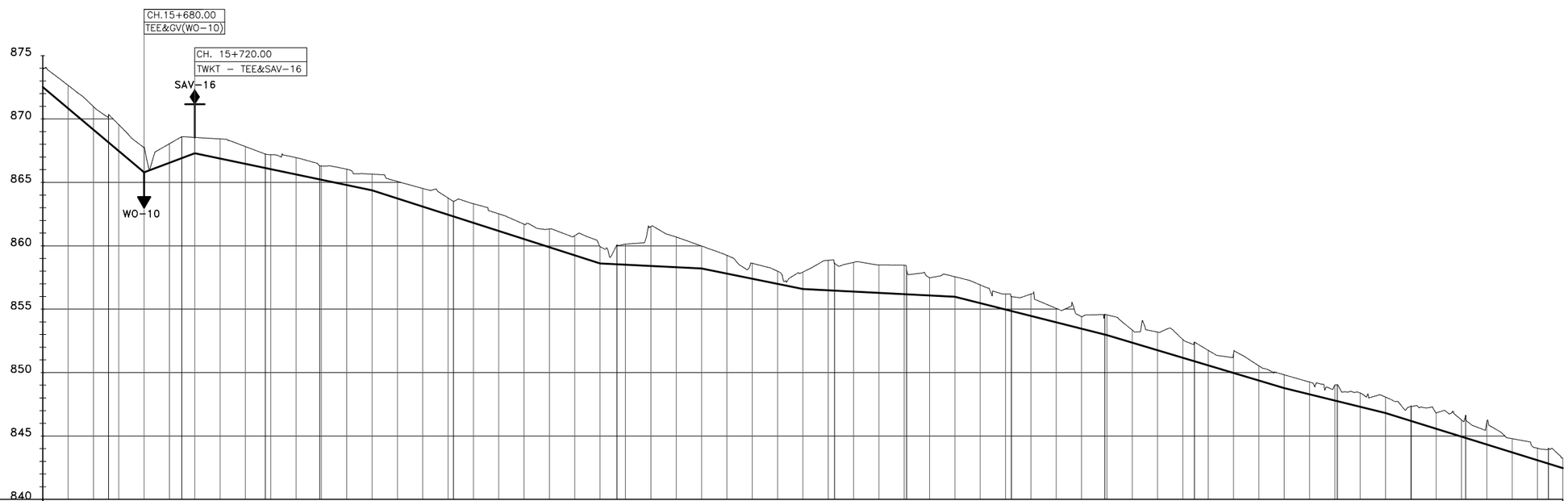

DATUM (m) 840

TYPE OF PIPE AND SIZE	DN 160mm HDPE PIPE - PE 100 SDR 11 (PN 16)												
GEOLOGICAL CONDITION	RED LOAM SOIL												
EXISTING GROUND LEVEL (m)	873.96	872.66	870.97	870.36	869.55	867.78	868.05	868.61	868.55	868.43	867.82	867.23	867.18
INVERT LEVELS (m)	872.51	870.83	869.15	868.15	867.47	865.79	866.54	866.91	867.30	866.88	866.46	866.13	866.04
CHAINAGE (m)	15+600.00	15+620.00	15+640.00	15+651.92	15+660.00	15+680.00	15+700.00	15+709.74	15+720.00	15+740.00	15+760.00	15+775.64	15+780.00
DEPTH OF INVERT (m)	1.44	1.82	1.82	2.21	2.08	1.99	1.50	1.70	1.25	1.55	1.36	1.10	1.14
SLOPE OF PIPE (H/V)	−1:19.00		−1:11.90			1:26.59			−1:47.85				
REFERENCE PEG NO.				TP 238				TP 239				TP 240	

EXISTING GROUND LEVEL (m)	866.95	866.30	866.30	866.04	865.65	865.07	864.52	863.77	863.49	863.32	862.52	861.70	861.33
INVERT LEVELS (m)	865.62	865.23	865.21	864.79	864.37	863.73	863.09	862.45	862.32	861.81	861.17	860.53	859.89
CHAINAGE (m)	15+800.00	15+818.72	15+820.00	15+840.00	15+860.00	15+880.00	15+900.00	15+920.00	15+924.27	15+940.00	15+960.00	15+980.00	16+000.00
DEPTH OF INVERT (m)	1.33	1.07	1.09	1.25	1.28	1.34	1.43	1.31	1.17	1.50	1.35	1.17	1.43
SLOPE OF PIPE (H/V)					−1:31.27								
REFERENCE PEG NO.		TP 241							TP 242				

EXISTING GROUND LEVEL (m)	860.80	859.93	860.08	860.13	861.51	860.70	859.98	859.25	858.62	857.99	857.93	858.85	858.62
INVERT LEVELS (m)	859.25	858.61	858.55	858.51	858.41	858.31	858.21	857.81	857.40	856.99	856.59	856.49	856.46
CHAINAGE (m)	16+020.00	16+040.00	16+053.37	16+060.00	16+080.00	16+100.00	16+120.00	16+140.00	16+160.00	16+180.00	16+200.00	16+220.00	16+224.94
DEPTH OF INVERT (m)	1.55	1.31	1.54	1.61	3.10	2.38	1.77	1.44	1.22	1.00	1.34	2.37	2.15
SLOPE OF PIPE (H/V)		−1:198.97					−1:49.23				−1:198.45		
REFERENCE PEG NO.			TP 243										TP 244

EXISTING GROUND LEVEL (m)	858.69	858.50	858.46	858.06	857.47	857.56	856.92	856.20	855.99	856.19	855.07	854.41	854.59
INVERT LEVELS (m)	856.39	856.28	856.18	856.17	856.08	855.98	855.48	854.98	854.86	854.47	853.97	853.47	853.00
CHAINAGE (m)	16+240.00	16+260.00	16+280.00	16+281.88	16+300.00	16+320.00	16+340.00	16+360.00	16+364.63	16+380.00	16+400.00	16+420.00	16+438.44
DEPTH OF INVERT (m)	2.31	2.21	2.28	1.89	1.39	1.58	1.44	1.22	1.13	1.72	1.10	0.95	1.59
SLOPE OF PIPE (H/V)						−1:39.74							
REFERENCE PEG NO.				TP 245					TP 246				TP 247

EXISTING GROUND LEVEL (m)	854.56	853.35	853.19	852.60	852.41	851.75	851.47	850.53	849.83	849.25	849.02	849.05
INVERT LEVELS (m)	852.96	852.36	851.76	851.17	850.90	850.57	849.97	849.37	848.77	848.28	847.79	847.74
CHAINAGE (m)	16+440.00	16+460.00	16+480.00	16+500.00	16+509.01	16+520.00	16+540.00	16+560.00	16+580.00	16+600.00	16+620.00	16+621.94
DEPTH OF INVERT (m)	1.59	0.99	1.43	1.44	1.51	1.19	1.50	1.16	1.06	0.97	1.23	1.30
SLOPE OF PIPE (H/V)	−1:33.40								−1:40.83			
REFERENCE PEG NO.					TP 248							TP 249

EXISTING GROUND LEVEL (m)	848.38	848.07	847.35	847.36	846.82	846.26	846.62	846.09	844.79	844.03	844.03	843.26
INVERT LEVELS (m)	847.30	846.81	846.19	846.18	845.57	844.95	844.84	844.33	843.70	843.08	842.81	842.46
CHAINAGE (m)	16+640.00	16+660.00	16+680.00	16+680.23	16+700.00	16+720.00	16+723.30	16+740.00	16+760.00	16+780.00	16+788.60	16+800.00
DEPTH OF INVERT (m)	1.08	1.26	1.16	1.17	1.25	1.32	1.78	1.77	1.08	0.95	1.22	0.80
SLOPE OF PIPE (H/V)		−1:32.17										
REFERENCE PEG NO.				TP 250			TP 251				TP 252	

LONGITUDINAL SECTION

0 100 200m

NOTES:

1. CONTOUR LEVELS ARE IN METERS AT TWO METER INTERVALS
2. GRID VALUES ARE IN METERS AT 200 METER INTERVALS
3. GEOLOGICAL CONDITIONS INDICATED ON DRAWING ARE FOR GENERAL GUIDANCE ONLY
4. MINIMUM PIPELINE SLOPES TO BE 1:200
5. DRAWING TO BE READ IN CONJUCTION WITH STANDARD DRAWINGS

LEGEND:

- - - -	ROAD (TARMAC)
— — —	ROAD / TRACK (EARTH / MURRAM)
-+-+-+-	FENCE / HEDGE
—1480—	CONTOURS
∘	ELECTRIC POST
⌶	CULVERT
▭	GATE
▨	TEMPORARY STRUCTURES
☐	BUILDINGS
━━━	PROPOSED TREATED WATER GRAVITY MAIN
TP10	TRAVERSE POINT & No.
⊗	TRIAL HOLE
30°	HORIZONTAL BEND (H) OR VERTICAL BEND (V) WITH ANGLE INDICATED
— — —	RIVER/STREAM
V.J.	VIKING JOHNSON
GV	GATE VALVE
SV-01	SECTIONAL VALVE & No.
WO-01	WASHOUT VALVE & No.
SAV-01	AIR VALVE & No.
WM	WATER METER
⌜ ⌟	PROPOSED MASONRY CHAMBER
◯	PROPOSED VALVE BOX
n	PIPELINE GRADIENT WITH SLOPE DIRECTION (SLOPE MIN. OR 1 IN n)

ISSUED FOR CONSTRUCTION

	REVISIONS	SIGN	DATE	APPROVED
	BY			
	CHECKED			
	BY			
	CHECKED			
	BY			
	CHECKED			
	BY			
	CHECKED			

CLIENT: **THE CHIEF EXECUTIVE OFFICER**
TANA WATER WORKS
DEVELOPMENT AGENCY
P.O BOX 1292 - 10100,
NYERI, KENYA

CONSULTING ENGINEERS:
MANGAT I.B PATEL(MIBP) LIMITED
P.O BOX 48674,00100-GPO,
NAIROBI, KENYA
E-MAIL: mibp.nairobi@mibp.co.ke
TEL: +254-20-2710500

PROJECT TITLE:
KENYA TOWNS SUSTAINABLE WATER SUPPLY AND SANITATION PROGRAM

CONTRACT No.TWSB/ADB/003/2019-2020

CONSTRUCTION OF CHUKA AND CHOGORIA WATER SUPPLY AND SANITATION PROJECT

LOT 1: CHUKA WATER SUPPLY

DRAWING TITLE:
TREATED WATER GRAVITY MAIN
KATHWANA LINE
PLAN & LONGITUDINAL SECTION
CH. 15+600.00 - 16+800.00
SHEET 14 OF 26

Designed by:	A.M.I	Drawn by:	P.W.K
Checked by:	N.J.N	Approved by:	N.J.N
Scale:	H- 1:4000, V- 1:400	Date:	FEB 2024
DRG No.	M407/CK/TWKT/14	REV	

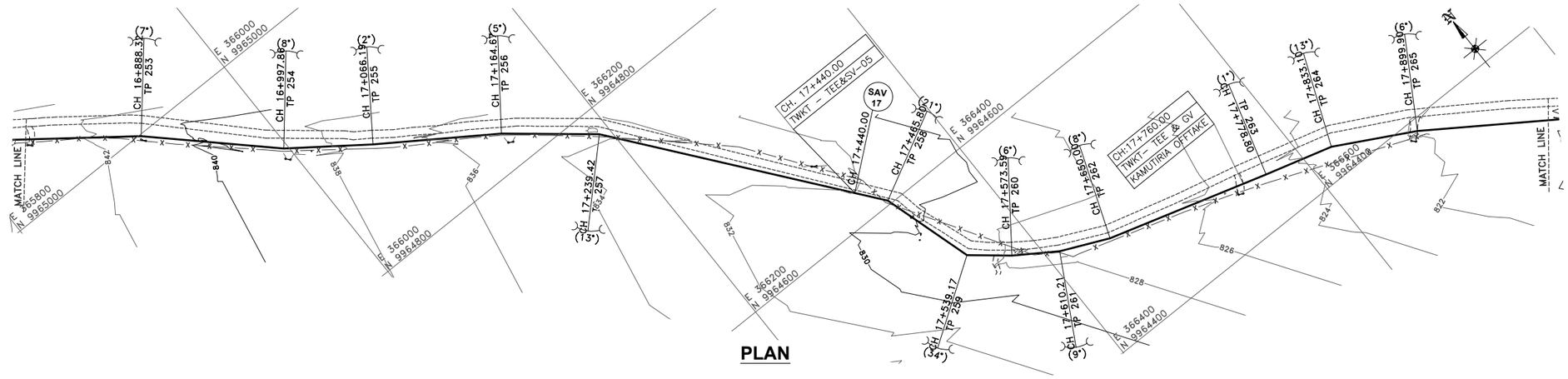

PLAN

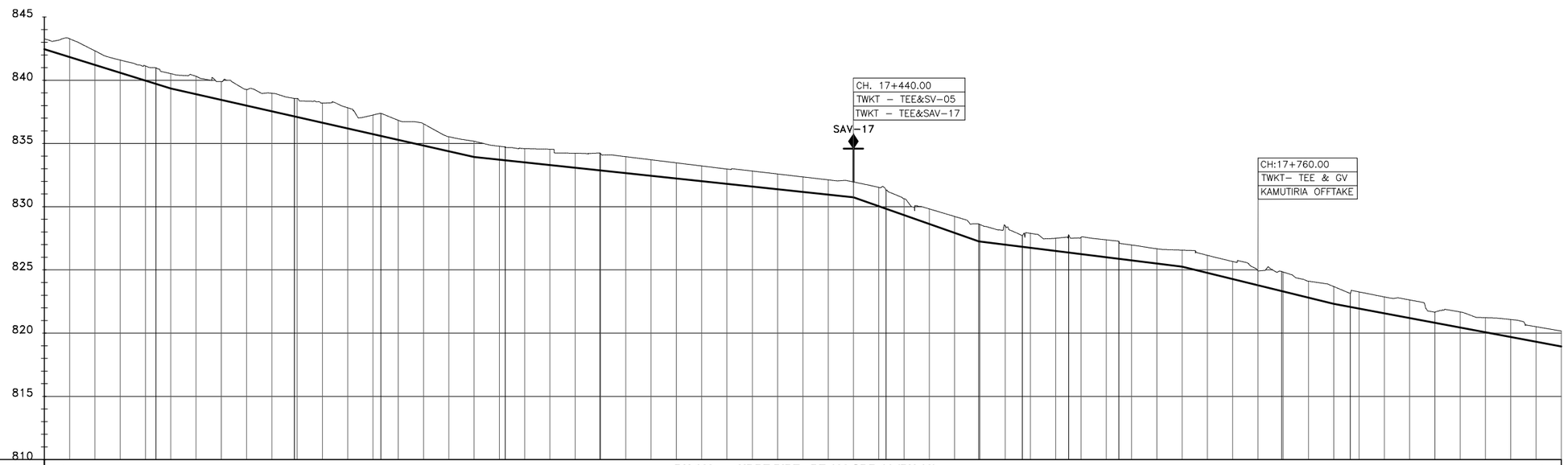

TYPE OF PIPE AND SIZE: DN 160mm HDPE PIPE - PE 100 SDR 11 (PN 16)

GEOLOGICAL CONDITION: RED LOAM SOIL

CHAINAGE (m)	EXISTING GROUND LEVEL (m)	INVERT LEVELS (m)	DEPTH OF INVERT (m)
16+800.00	843.26	842.46	0.80
16+820.00	843.28	841.84	1.44
16+840.00	842.33	841.22	1.11
16+860.00	841.60	840.60	1.00
16+880.00	841.13	839.97	1.16
16+888.32	840.99	839.71	1.28
16+900.00	840.52	839.35	1.17
16+920.00	840.32	838.90	1.42
16+940.00	839.90	838.45	1.45
16+960.00	839.26	837.99	1.27
16+980.00	838.96	837.54	1.42
16+997.86	838.56	837.14	1.42
17+000.00	838.55	837.09	1.46
17+020.00	838.19	836.64	1.56
17+040.00	837.82	836.18	1.64
17+060.00	837.25	835.73	1.52
17+066.19	837.39	835.59	1.80
17+080.00	836.83	835.28	1.55
17+100.00	836.55	834.83	1.73
17+120.00	835.53	834.37	1.15
17+140.00	835.18	833.92	1.25
17+160.00	834.78	833.71	1.07
17+164.67	834.74	833.66	1.08
17+180.00	834.60	833.50	1.10
17+200.00	834.55	833.28	1.26
17+220.00	834.23	833.07	1.16
17+239.42	834.25	832.87	1.39
17+240.00	834.19	832.86	1.33
17+260.00	833.95	832.65	1.31
17+280.00	833.71	832.43	1.27
17+300.00	833.46	832.22	1.24
17+320.00	833.22	832.01	1.21
17+340.00	832.98	831.80	1.18
17+360.00	832.82	831.58	1.23
17+380.00	832.59	831.37	1.21
17+400.00	832.35	831.16	1.19
17+420.00	832.12	830.95	1.18
17+440.00	831.96	830.73	1.22
17+460.00	831.52	830.03	1.49
17+465.80	831.29	829.83	1.46
17+480.00	830.63	829.33	1.30
17+500.00	829.82	828.63	1.19
17+520.00	829.23	827.93	1.30
17+539.17	828.63	827.26	1.38
17+540.00	828.60	827.25	1.35
17+560.00	828.50	827.00	1.50
17+573.59	827.70	826.83	0.87
17+590.00	827.89	826.75	1.14
17+600.00	827.50	826.50	1.00
17+610.21	827.79	826.37	1.41
17+620.00	827.58	826.25	1.33
17+640.00	827.38	826.00	1.37
17+650.00	827.27	825.88	1.39
17+660.00	826.97	825.76	1.21
17+680.00	826.67	825.51	1.16
17+700.00	826.56	825.26	1.30
17+720.00	826.15	824.77	1.39
17+740.00	825.66	824.28	1.39
17+760.00	824.93	823.78	1.15
17+778.80	824.89	823.32	1.57
17+780.00	824.82	823.29	1.53
17+800.00	824.11	822.80	1.31
17+820.00	823.68	822.31	1.37
17+833.10	823.13	822.07	1.07
17+840.00	823.26	821.94	1.32
17+860.00	822.86	821.56	1.30
17+880.00	822.62	821.19	1.43
17+899.90	821.65	820.82	0.83
17+900.00	821.66	820.82	0.84
17+920.00	821.67	820.44	1.23
17+940.00	821.22	820.07	1.15
17+960.00	821.08	819.70	1.38
17+980.00	820.51	819.32	1.18
18+000.00	820.16	818.95	1.21

SLOPE OF PIPE (H/V): –1:32.17 | –1:44.21 | –1:94.10 | –1:28.52 | –1:80.48 | –1:40.70 | –1:53.59 | –1:61.15

REFERENCE PEG NO.: TP 253, TP 254, TP 255, TP 256, TP 257, TP 258, TP 259, TP 260, TP 261, TP 262, TP 263, TP 264, TP 265

LONGITUDINAL SECTION

0 100 200m

NOTES:

1. CONTOUR LEVELS ARE IN METERS AT TWO METER INTERVALS
2. GRID VALUES ARE IN METERS AT 200 METER INTERVALS
3. GEOLOGICAL CONDITIONS INDICATED ON DRAWING ARE FOR GENERAL GUIDANCE ONLY
4. MINIMUM PIPELINE SLOPES TO BE 1:200
5. DRAWING TO BE READ IN CONJUCTION WITH STANDARD DRAWINGS

LEGEND:

- ROAD (TARMAC)
- ROAD / TRACK (EARTH / MURRAM)
- FENCE / HEDGE
- 1480 CONTOURS
- ELECTRIC POST
- CULVERT
- GATE
- TEMPORARY STRUCTURES
- BUILDINGS
- PROPOSED TREATED WATER GRAVITY MAIN
- TP10 TRAVERSE POINT & No.
- TRIAL HOLE
- 30° HORIZONTAL BEND (H) OR VERTICAL BEND (V) WITH ANGLE INDICATED
- RIVER/STREAM
- V.J. VIKING JOHNSON
- GV GATE VALVE
- SV-01 SECTIONAL VALVE & No.
- WO-01 WASHOUT VALVE & No.
- SAV-01 AIR VALVE & No.
- WM WATER METER
- PROPOSED MASONRY CHAMBER
- PROPOSED VALVE BOX
- n PIPELINE GRADIENT WITH SLOPE DIRECTION (SLOPE MIN. OR 1 IN n)

ISSUED FOR CONSTRUCTION

REVISIONS		SIGN	DATE	APPROVED
	BY			
	CHECKED			
	BY			
	CHECKED			
	BY			
	CHECKED			
	BY			
	CHECKED			

CLIENT: THE CHIEF EXECUTIVE OFFICER
TANA WATER WORKS DEVELOPMENT AGENCY
P.O BOX 1292 - 10100,
NYERI, KENYA

CONSULTING ENGINEERS:
MANGAT I.B PATEL(MIBP) LIMITED
P.O BOX 48674,00100-GPO,
NAIROBI, KENYA
E-MAIL: mibp.nairobi@mibp.co.ke
TEL: +254-20-2710500

PROJECT TITLE:
KENYA TOWNS SUSTAINABLE WATER SUPPLY AND SANITATION PROGRAM

CONTRACT No.TWSB/ADB/003/2019-2020
CONSTRUCTION OF CHUKA AND CHOGORIA WATER SUPPLY AND SANITATION PROJECT

LOT 1: CHUKA WATER SUPPLY

DRAWING TITLE:
TREATED WATER GRAVITY MAIN KATHWANA LINE PLAN & LONGITUDINAL SECTION CH. 16+800.00 - 18+000.00 SHEET 15 OF 26

Designed by:	A.M.I	Drawn by:	P.W.K
Checked by:	N.J.N	Approved by:	N.J.N
Scale:	H- 1:4000, V- 1:400	Date:	FEB 2024

DRG No. M407/CK/TWKT/15 REV

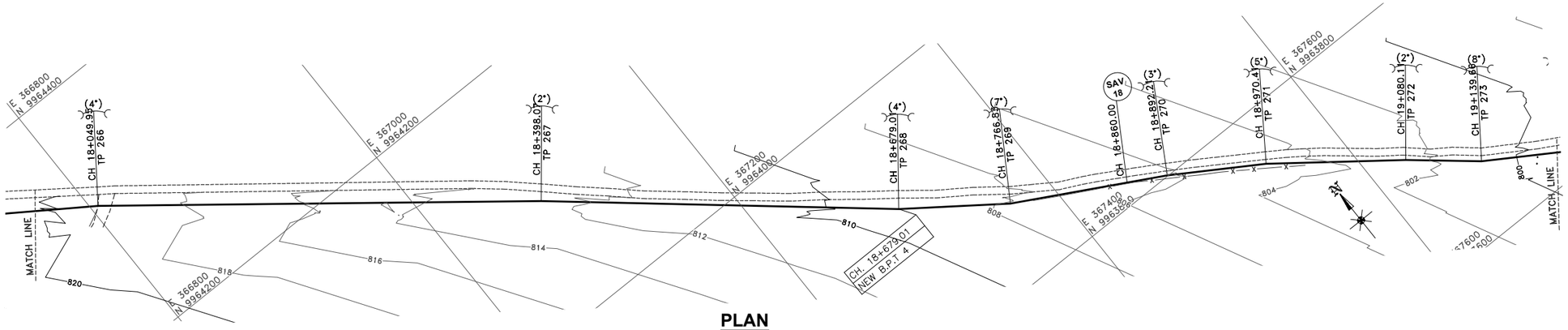

PLAN

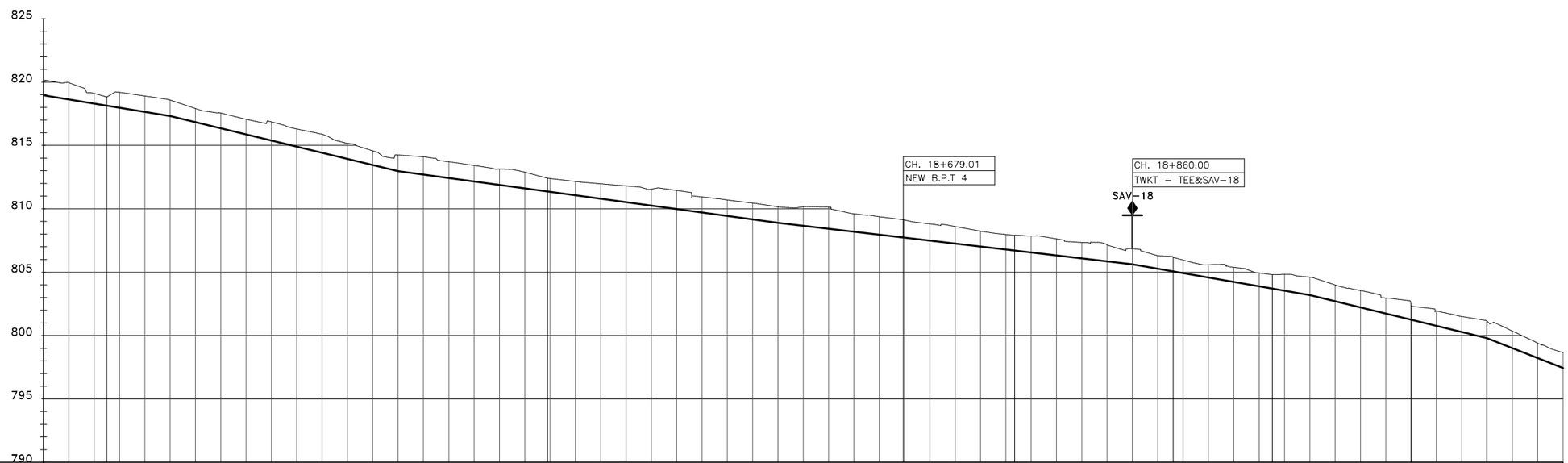

DATUM (m)

TYPE OF PIPE AND SIZE	DN 160mm HDPE PIPE - PE 100 SDR 11 (PN 16)
GEOLOGICAL CONDITION	RED LOAM SOIL

CHAINAGE (m)	EXISTING GROUND LEVEL (m)	INVERT LEVELS (m)	DEPTH OF INVERT (m)
18+000.00	820.16	818.95	1.21
18+020.00	819.95	818.62	1.32
18+040.00	819.10	818.30	0.80
18+049.95	818.82	818.13	0.68
18+060.00	819.19	817.97	1.22
18+080.00	818.90	817.64	1.25
18+100.00	818.58	817.32	1.26
18+120.00	817.91	816.83	1.07
18+140.00	817.55	816.35	1.20
18+160.00	817.06	815.87	1.19
18+180.00	816.86	815.39	1.47
18+200.00	816.30	814.91	1.39
18+220.00	815.88	814.43	1.46
18+240.00	815.17	813.94	1.23
18+260.00	814.57	813.46	1.11
18+280.00	814.25	812.98	1.27
18+300.00	814.10	812.71	1.39
18+320.00	813.71	812.43	1.27
18+340.00	813.42	812.16	1.26
18+360.00	813.13	811.89	1.25
18+380.00	812.89	811.62	1.27
18+398.07	812.41	811.37	1.04
18+400.00	812.39	811.34	1.05
18+420.00	812.16	811.07	1.09
18+440.00	811.97	810.80	1.17
18+460.00	811.81	810.52	1.28
18+480.00	811.55	810.25	1.30
18+500.00	811.45	809.98	1.47
18+520.00	810.94	809.71	1.23
18+540.00	810.70	809.43	1.26
18+560.00	810.45	809.16	1.29
18+580.00	810.16	808.89	1.27
18+600.00	810.17	808.65	1.51
18+620.00	810.14	808.42	1.72
18+640.00	809.61	808.19	1.42
18+660.00	809.37	807.95	1.42
18+679.01	809.14	807.73	1.41
18+680.00	809.11	807.72	1.39
18+700.00	808.81	807.48	1.32
18+720.00	808.60	807.25	1.35
18+740.00	808.23	807.02	1.22
18+760.00	807.97	806.78	1.19
18+766.83	807.92	806.70	1.22
18+780.00	807.85	806.55	1.30
18+800.00	807.62	806.32	1.31
18+820.00	807.34	806.08	1.26
18+840.00	807.15	805.85	1.30
18+860.00	806.85	805.62	1.24
18+880.00	806.30	805.27	1.03
18+892.21	806.16	805.06	1.10
18+900.00	805.96	804.93	1.03
18+920.00	805.58	804.58	1.00
18+940.00	805.38	804.24	1.14
18+960.00	804.94	803.89	1.05
18+970.41	804.81	803.71	1.10
18+980.00	804.82	803.54	1.28
19+000.00	804.61	803.20	1.41
19+020.00	804.00	802.71	1.28
19+040.00	803.55	802.23	1.32
19+060.00	802.96	801.74	1.22
19+080.00	802.40	801.26	1.15
19+080.11	802.32	801.26	1.06
19+100.00	801.94	800.77	1.16
19+120.00	801.50	800.29	1.22
19+139.66	801.18	799.81	1.37
19+140.00	801.15	799.80	1.35
19+160.00	800.36	799.01	1.34
19+180.00	799.41	798.23	1.18
19+200.00	798.66	797.45	1.21

SLOPE OF PIPE (H/V): –1:53.59, –1:61.15, –1:41.50, –1:73.30, –1:85.59, –1:57.95, –1:41.21, –1:25.52, –1:32.40

REFERENCE PEG NO.: TP 266, TP 267, TP 268, TP 269, TP 270, TP 271, TP 272, TP 273

LONGITUDINAL SECTION

0 100 200m

NOTES:

1. CONTOUR LEVELS ARE IN METERS AT TWO METER INTERVALS
2. GRID VALUES ARE IN METERS AT 200 METER INTERVALS
3. GEOLOGICAL CONDITIONS INDICATED ON DRAWING ARE FOR GENERAL GUIDANCE ONLY
4. MINIMUM PIPELINE SLOPES TO BE 1:200
5. DRAWING TO BE READ IN CONJUCTION WITH STANDARD DRAWINGS

LEGEND:

- ROAD (TARMAC)
- ROAD / TRACK (EARTH / MURRAM)
- FENCE / HEDGE
- 1480 CONTOURS
- ELECTRIC POST
- CULVERT
- GATE
- TEMPORARY STRUCTURES
- BUILDINGS
- PROPOSED TREATED WATER GRAVITY MAIN
- TP10 TRAVERSE POINT & No.
- TRIAL HOLE
- 30° HORIZONTAL BEND (H) OR VERTICAL BEND (V) WITH ANGLE INDICATED
- RIVER/STREAM
- V.J. VIKING JOHNSON
- GV GATE VALVE
- SV-01 SECTIONAL VALVE & No.
- WO-01 WASHOUT VALVE & No.
- SAV-01 AIR VALVE & No.
- WM WATER METER
- PROPOSED MASONRY CHAMBER
- PROPOSED VALVE BOX
- n PIPELINE GRADIENT WITH SLOPE DIRECTION (SLOPE MIN. OR 1 IN n)

ISSUED FOR CONSTRUCTION

REVISIONS		SIGN	DATE	APPROVED
	BY			
	CHECKED			
	BY			
	CHECKED			
	BY			
	CHECKED			
	BY			
	CHECKED			

CLIENT:
THE CHIEF EXECUTIVE OFFICER
TANA WATER WORKS DEVELOPMENT AGENCY
P.O BOX 1292 - 10100,
NYERI, KENYA

CONSULTING ENGINEERS:
MANGAT I.B PATEL(MIBP) LIMITED
P.O BOX 48674,00100-GPO,
NAIROBI, KENYA
E-MAIL: mibp.nairobi@mibp.co.ke
TEL: +254-20-2710500

PROJECT TITLE:
KENYA TOWNS SUSTAINABLE WATER SUPPLY AND SANITATION PROGRAM

CONTRACT No.TWSB/ADB/003/2019-2020
CONSTRUCTION OF CHUKA AND CHOGORIA WATER SUPPLY AND SANITATION PROJECT

LOT 1: CHUKA WATER SUPPLY

DRAWING TITLE:
TREATED WATER GRAVITY MAIN
KATHWANA LINE
PLAN & LONGITUDINAL SECTION
CH. 18+000.00 - 19+200.00
SHEET 16 OF 26

Designed by:	A.M.I	Drawn by:	P.W.K
Checked by:	N.J.N	Approved by:	N.J.N
Scale:	H- 1:4000, V- 1:400	Date:	FEB 2024
DRG No.	M407/CK/TWKT/16	REV	

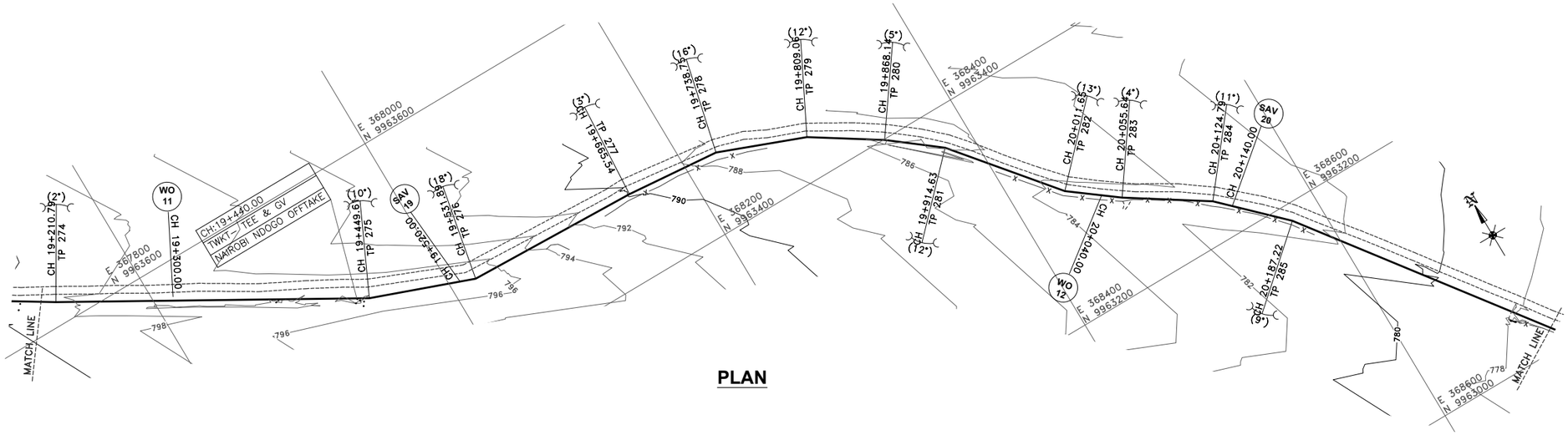

PLAN

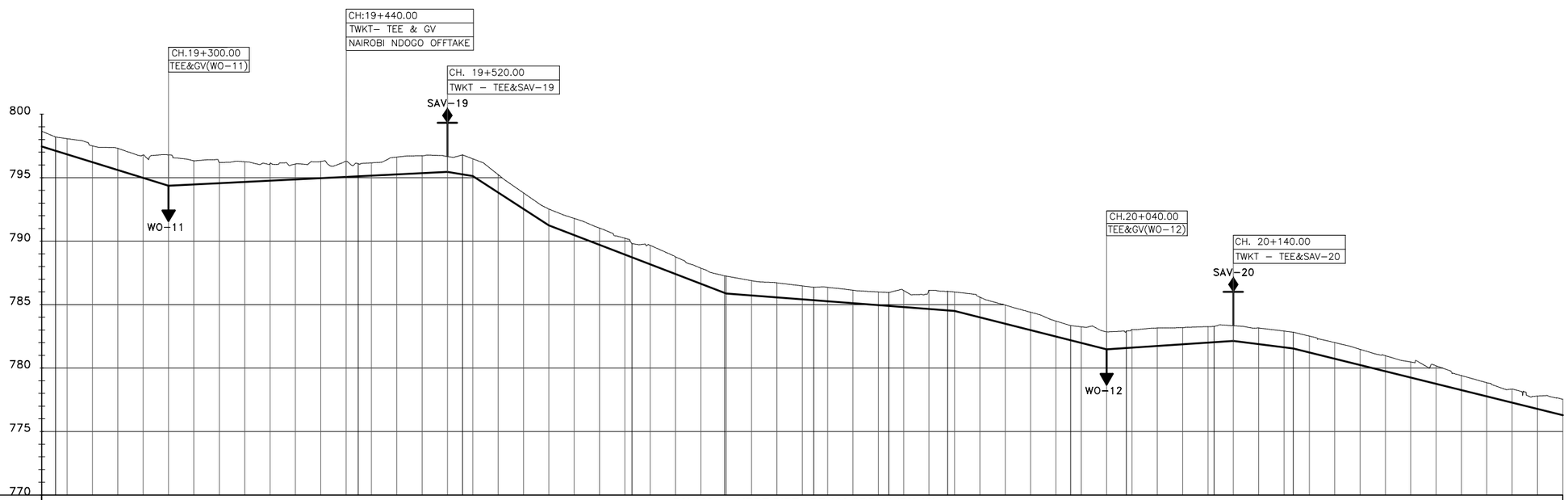

DATUM (m) 770

TYPE OF PIPE AND SIZE: DN 160mm HDPE PIPE - PE 100 SDR 11 (PN 16)

GEOLOGICAL CONDITION: RED LOAM SOIL

EXISTING GROUND LEVEL (m)	798.66	798.20	798.07	797.50	797.31	796.78	796.80	796.33	796.19	796.25	796.11	796.07
INVERT LEVELS (m)	797.45	797.11	796.83	796.21	795.59	794.98	794.36	794.46	794.56	794.66	794.76	794.86
CHAINAGE (m)	19+200.00	19+210.79	19+220.00	19+240.00	19+260.00	19+280.00	19+300.00	19+320.00	19+340.00	19+360.00	19+380.00	19+400.00
DEPTH OF INVERT (m)	1.21	1.09	1.24	1.29	1.71	1.80	2.43	1.86	1.63	1.59	1.35	1.21
SLOPE OF PIPE (H/V)	-1:25.52	-1:32.40					1:199.83					
REFERENCE PEG NO.		TP 274										

EXISTING GROUND LEVEL (m)	796.27	796.29	796.10	796.17	796.62	796.73	796.66	796.79	796.48	795.24	793.80	792.53
INVERT LEVELS (m)	794.96	795.06	795.11	795.16	795.26	795.36	795.46	795.26	795.12	793.83	792.54	791.25
CHAINAGE (m)	19+420.00	19+440.00	19+449.61	19+460.00	19+480.00	19+500.00	19+520.00	19+531.89	19+540.00	19+560.00	19+580.00	19+600.00
DEPTH OF INVERT (m)	1.31	1.23	0.99	1.01	1.36	1.37	1.20	1.53	1.36	1.41	1.26	1.28
SLOPE OF PIPE (H/V)							-1:59.45		-1:15.48			-1:26.07
REFERENCE PEG NO.			TP 275					TP 276				

EXISTING GROUND LEVEL (m)	791.79	791.03	790.23	789.81	789.66	788.75	787.87	787.27	787.24	786.88	786.71	786.47
INVERT LEVELS (m)	790.48	789.71	788.95	788.73	788.18	787.41	786.65	785.93	785.88	785.73	785.57	785.42
CHAINAGE (m)	19+620.00	19+640.00	19+660.00	19+665.54	19+680.00	19+700.00	19+720.00	19+738.75	19+740.00	19+760.00	19+780.00	19+800.00
DEPTH OF INVERT (m)	1.31	1.32	1.28	1.07	1.49	1.34	1.22	1.34	1.37	1.16	1.14	1.05
SLOPE OF PIPE (H/V)									-1:131.42			
REFERENCE PEG NO.				TP 277				TP 278				

EXISTING GROUND LEVEL (m)	786.36	786.36	786.13	785.99	785.95	786.11	786.13	786.05	785.99	785.59	784.96	784.40
INVERT LEVELS (m)	785.35	785.27	785.12	784.96	784.90	784.81	784.66	784.55	784.51	784.00	783.50	783.00
CHAINAGE (m)	19+809.06	19+820.00	19+840.00	19+860.00	19+868.14	19+880.00	19+900.00	19+914.63	19+920.00	19+940.00	19+960.00	19+980.00
DEPTH OF INVERT (m)	1.01	1.09	1.01	1.03	1.04	1.30	1.47	1.50	1.48	1.58	1.46	1.41
SLOPE OF PIPE (H/V)									-1:39.67			
REFERENCE PEG NO.	TP 279				TP 280			TP 281				

EXISTING GROUND LEVEL (m)	783.70	783.35	783.25	782.86	782.92	783.03	783.15	783.18	783.26	783.27	783.34	783.16
INVERT LEVELS (m)	782.49	782.20	781.99	781.48	781.59	781.61	781.75	781.88	782.01	782.04	782.14	781.89
CHAINAGE (m)	20+000.00	20+011.65	20+020.00	20+040.00	20+055.64	20+060.00	20+080.00	20+100.00	20+120.00	20+124.79	20+140.00	20+160.00
DEPTH OF INVERT (m)	1.21	1.15	1.26	1.37	1.33	1.41	1.41	1.30	1.26	1.23	1.20	1.27
SLOPE OF PIPE (H/V)				1:152.81							-1:80.15	
REFERENCE PEG NO.		TP 282			TP 283					TP 284		

EXISTING GROUND LEVEL (m)	782.91	782.83	782.52	782.01	781.48	780.98	780.48	780.18	779.41	778.85	778.34	777.79	777.54
INVERT LEVELS (m)	781.64	781.55	781.23	780.74	780.24	779.75	779.26	778.76	778.27	777.77	777.28	776.79	776.29
CHAINAGE (m)	20+180.00	20+187.22	20+200.00	20+220.00	20+240.00	20+260.00	20+280.00	20+300.00	20+320.00	20+340.00	20+360.00	20+380.00	20+400.00
DEPTH OF INVERT (m)	1.28	1.28	1.29	1.27	1.23	1.22	1.22	1.42	1.14	1.07	1.06	1.01	1.25
SLOPE OF PIPE (H/V)		-1:40.48											-1:36.55
REFERENCE PEG NO.		TP 285											

LONGITUDINAL SECTION

0 100 200m

NOTES:

1. CONTOUR LEVELS ARE IN METERS AT TWO METER INTERVALS
2. GRID VALUES ARE IN METERS AT 200 METER INTERVALS
3. GEOLOGICAL CONDITIONS INDICATED ON DRAWING ARE FOR GENERAL GUIDANCE ONLY
4. MINIMUM PIPELINE SLOPES TO BE 1:200
5. DRAWING TO BE READ IN CONJUCTION WITH STANDARD DRAWINGS

LEGEND:

	ROAD (TARMAC)
	ROAD / TRACK (EARTH / MURRAM)
	FENCE / HEDGE
1480	CONTOURS
○	ELECTRIC POST
	CULVERT
	GATE
▨	TEMPORARY STRUCTURES
☐	BUILDINGS
	PROPOSED TREATED WATER GRAVITY MAIN
TP10	TRAVERSE POINT & No.
⊗	TRIAL HOLE
30°	HORIZONTAL BEND (H) OR VERTICAL BEND (V) WITH ANGLE INDICATED
	RIVER/STREAM
V.J.	VIKING JOHNSON
GV	GATE VALVE
SV-01	SECTIONAL VALVE & No.
WO-01	WASHOUT VALVE & No.
SAV-01	AIR VALVE & No.
WM	WATER METER
☐	PROPOSED MASONRY CHAMBER
○	PROPOSED VALVE BOX
n	PIPELINE GRADIENT WITH SLOPE DIRECTION (SLOPE MIN. OR 1 IN n)

ISSUED FOR CONSTRUCTION

	REVISIONS		SIGN	DATE	APPROVED
		BY			
		CHECKED			
		BY			
		CHECKED			
		BY			
		CHECKED			
		BY			
		CHECKED			

CLIENT:
THE CHIEF EXECUTIVE OFFICER
TANA WATER WORKS
DEVELOPMENT AGENCY
P.O BOX 1292 - 10100,
NYERI, KENYA

CONSULTING ENGINEERS:
MANGAT I.B PATEL(MIBP) LIMITED
P.O BOX 48674,00100-GPO,
NAIROBI, KENYA
E-MAIL: mibp.nairobi@mibp.co.ke
TEL: +254-20-2710500

PROJECT TITLE:
KENYA TOWNS SUSTAINABLE WATER SUPPLY AND SANITATION PROGRAM

CONTRACT No.TWSB/ADB/003/2019-2020
CONSTRUCTION OF CHUKA AND CHOGORIA WATER SUPPLY AND SANITATION PROJECT

LOT 1: CHUKA WATER SUPPLY

DRAWING TITLE:
TREATED WATER GRAVITY MAIN
KATHWANA LINE
PLAN & LONGITUDINAL SECTION
CH. 19+200.00 - 20+400.00
SHEET 17 OF 26

Designed by:	A.M.I	Drawn by:	P.W.K
Checked by:	N.J.N	Approved by:	N.J.N
Scale:	H- 1:4000, V- 1:400	Date:	FEB 2024
DRG No.	M407/CK/TWKT/17	REV	

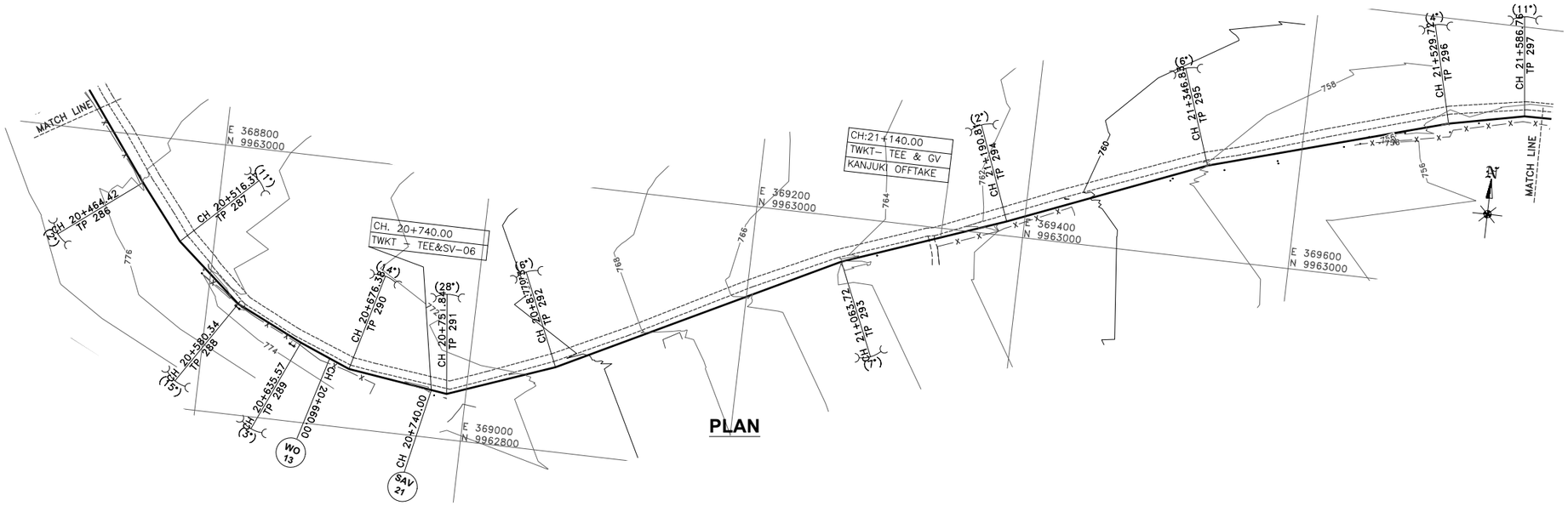

PLAN

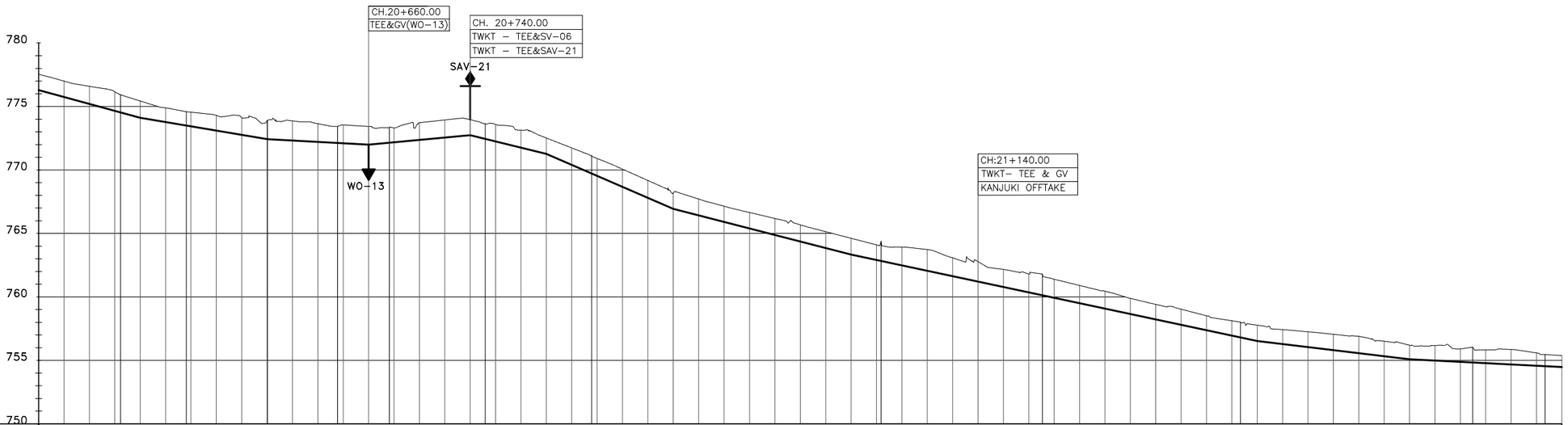

TYPE OF PIPE AND SIZE: DN 160mm HDPE PIPE - PE 100 SDR 11 (PN 16)

GEOLOGICAL CONDITION: RED LOAM SOIL

CHAINAGE (m)	EXISTING GROUND LEVEL (m)	INVERT LEVELS (m)	DEPTH OF INVERT (m)
20+400.00	777.54	776.29	1.25
20+420.00	777.00	775.75	1.25
20+440.00	776.59	775.20	1.39
20+460.00	776.15	774.65	1.50
20+464.42	775.92	774.53	1.39
20+480.00	775.43	774.10	1.33
20+500.00	774.89	773.77	1.12
20+516.37	774.59	773.49	1.10
20+520.00	774.55	773.43	1.12
20+540.00	774.30	773.10	1.20
20+560.00	774.13	772.76	1.36
20+580.00	773.87	772.43	1.44
20+580.34	773.91	772.42	1.49
20+600.00	773.86	772.32	1.55
20+620.00	773.64	772.21	1.44
20+635.57	773.43	772.13	1.31
20+640.00	773.55	772.10	1.45
20+660.00	773.43	771.99	1.44
20+676.38	773.38	772.15	1.23
20+680.00	773.32	772.18	1.13
20+700.00	773.72	772.37	1.35
20+720.00	773.94	772.55	1.39
20+740.00	773.96	772.74	1.22
20+751.84	773.65	772.45	1.20
20+760.00	773.99	772.25	1.34
20+780.00	773.14	771.75	1.38
20+800.00	772.52	771.26	1.25
20+820.00	771.73	770.40	1.34
20+835.73	771.12	769.71	1.41
20+840.00	770.90	769.53	1.37
20+860.00	770.06	768.66	1.40
20+880.00	769.17	767.80	1.37
20+900.00	768.20	766.93	1.27
20+920.00	767.71	766.42	1.29
20+940.00	767.14	765.90	1.24
20+960.00	766.65	765.39	1.26
20+980.00	766.18	764.87	1.31
21+000.00	765.68	764.36	1.32
21+020.00	765.14	763.84	1.29
21+040.00	764.62	763.33	1.29
21+060.00	764.10	762.91	1.19
21+063.72	764.39	762.83	1.56
21+080.00	763.92	762.48	1.44
21+100.00	763.73	762.06	1.68
21+120.00	763.08	761.63	1.44
21+140.00	762.78	761.21	1.58
21+160.00	762.17	760.78	1.39
21+180.00	761.81	760.36	1.46
21+190.81	761.80	760.13	1.67
21+200.00	761.39	759.93	1.46
21+220.00	760.90	759.51	1.40
21+240.00	760.45	759.08	1.37
21+260.00	759.88	758.66	1.23
21+280.00	759.41	758.23	1.18
21+300.00	759.04	757.81	1.23
21+320.00	758.52	757.38	1.14
21+340.00	758.12	756.96	1.16
21+346.83	758.02	756.81	1.20
21+360.00	757.77	756.53	1.24
21+380.00	757.43	756.29	1.13
21+400.00	757.25	756.05	1.20
21+420.00	757.06	755.81	1.24
21+440.00	756.90	755.57	1.33
21+460.00	756.51	755.33	1.18
21+480.00	756.19	755.09	1.10
21+500.00	756.17	754.99	1.18
21+520.00	755.90	754.89	1.01
21+529.72	756.05	754.84	1.21
21+540.00	755.84	754.79	1.05
21+560.00	755.86	754.68	1.18
21+580.00	755.59	754.58	1.01
21+586.76	755.46	754.55	0.91
21+600.00	755.38	754.48	0.90

SLOPE OF PIPE (H/V): –1:40.48, –1:36.56, –1:59.62, –1:187.10, 1:107.43, –1:40.60, –1:23.09, –1:38.89, –1:47.07, –1:83.12, –1:197.33

REFERENCE PEG NO.: TP 286, TP 287, TP 288, TP 289, TP 290, TP 291, TP 292, TP 293, TP 294, TP 295, TP 296, TP 297

LONGITUDINAL SECTION

0 100 200m

NOTES:

1. CONTOUR LEVELS ARE IN METERS AT TWO METER INTERVALS
2. GRID VALUES ARE IN METERS AT 200 METER INTERVALS
3. GEOLOGICAL CONDITIONS INDICATED ON DRAWING ARE FOR GENERAL GUIDANCE ONLY
4. MINIMUM PIPELINE SLOPES TO BE 1:200
5. DRAWING TO BE READ IN CONJUCTION WITH STANDARD DRAWINGS

LEGEND:

- ROAD (TARMAC)
- ROAD / TRACK (EARTH / MURRAM)
- FENCE / HEDGE
- 1480 CONTOURS
- ELECTRIC POST
- CULVERT
- GATE
- TEMPORARY STRUCTURES
- BUILDINGS
- PROPOSED TREATED WATER GRAVITY MAIN
- TP10 TRAVERSE POINT & No.
- TRIAL HOLE
- 30° HORIZONTAL BEND (H) OR VERTICAL BEND (V) WITH ANGLE INDICATED
- RIVER/STREAM
- V.J. VIKING JOHNSON
- GV GATE VALVE
- SV-01 SECTIONAL VALVE & No.
- WO-01 WASHOUT VALVE & No.
- SAV-01 AIR VALVE & No.
- WM WATER METER
- PROPOSED MASONRY CHAMBER
- PROPOSED VALVE BOX
- n PIPELINE GRADIENT WITH SLOPE DIRECTION (SLOPE MIN. OR 1 IN n)

ISSUED FOR CONSTRUCTION

	REVISIONS		SIGN	DATE	APPROVED
		BY			
		CHECKED			
		BY			
		CHECKED			
		BY			
		CHECKED			
		BY			
		CHECKED			

CLIENT:
THE CHIEF EXECUTIVE OFFICER
TANA WATER WORKS DEVELOPMENT AGENCY
P.O BOX 1292 - 10100,
NYERI, KENYA

CONSULTING ENGINEERS:
MANGAT I.B PATEL(MIBP) LIMITED
P.O BOX 48674,00100-GPO,
NAIROBI, KENYA
E-MAIL: mibp.nairobi@mibp.co.ke
TEL: +254-20-2710500

PROJECT TITLE:
KENYA TOWNS SUSTAINABLE WATER SUPPLY AND SANITATION PROGRAM

CONTRACT No.TWSB/ADB/003/2019-2020
CONSTRUCTION OF CHUKA AND CHOGORIA WATER SUPPLY AND SANITATION PROJECT

LOT 1: CHUKA WATER SUPPLY

DRAWING TITLE:
TREATED WATER GRAVITY MAIN KATHWANA LINE
PLAN & LONGITUDINAL SECTION
CH. 20+400.00 - 21+600.00
SHEET 18 OF 26

Designed by:	A.M.I	Drawn by:	P.W.K
Checked by:	N.J.N	Approved by:	N.J.N
Scale:	H- 1:4000, V- 1:400	Date:	FEB 2024

DRG No. **M407/CK/TWKT/18** REV

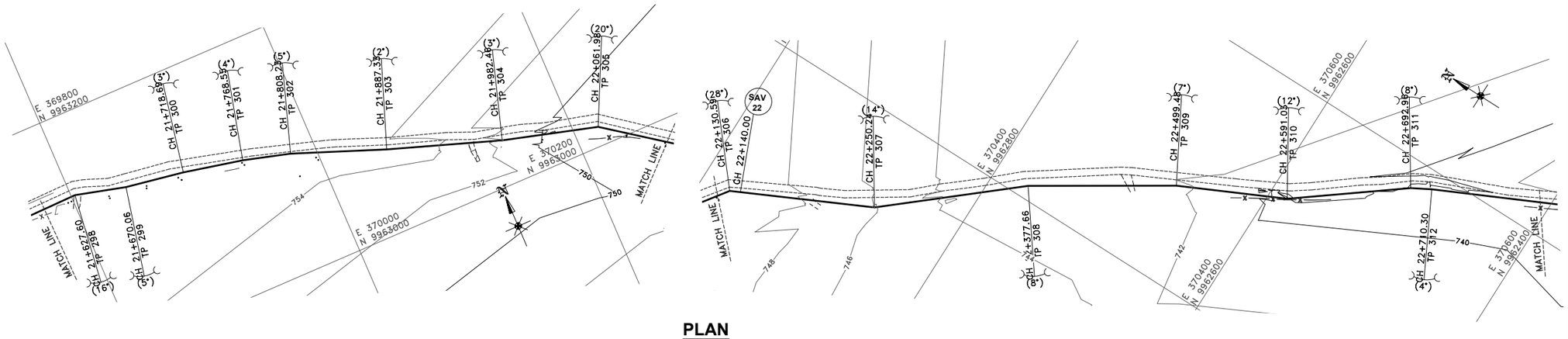

PLAN

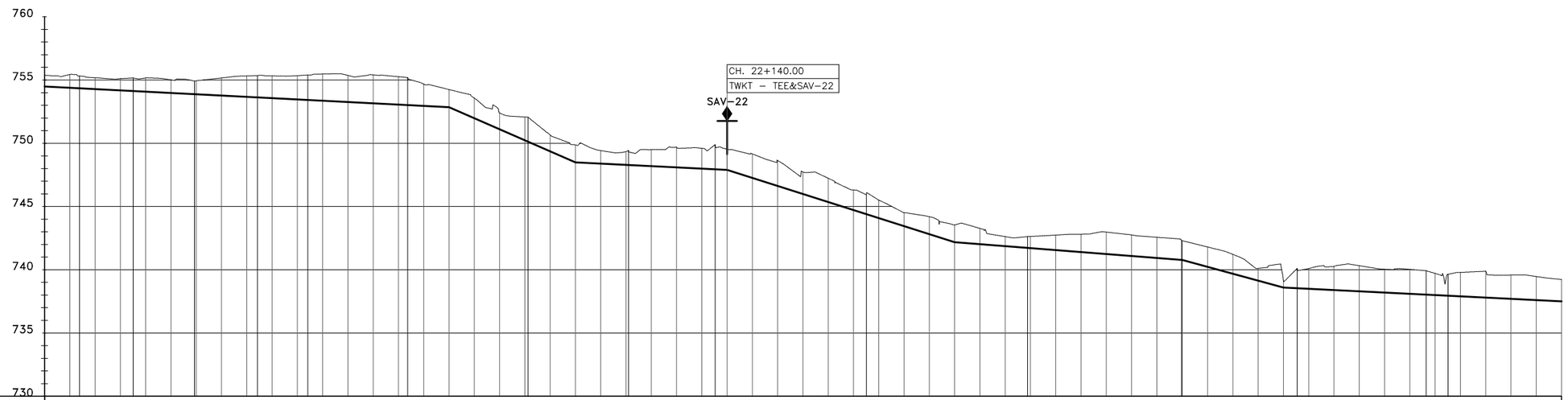

TYPE OF PIPE AND SIZE: DN 160mm HDPE PIPE - PE 100 SDR 11 (PN 16)

GEOLOGICAL CONDITION: RED LOAM SOIL

CHAINAGE (m)	EXISTING GROUND LEVEL (m)	INVERT LEVELS (m)	DEPTH OF INVERT (m)	REFERENCE PEG NO.
21+600.00	755.38	754.48	0.90	
21+620.00	755.43	754.38	1.06	
21+627.60	755.32	754.34	0.97	
21+640.00	755.18	754.28	0.90	
21+660.00	755.11	754.18	0.93	
21+670.06	755.16	754.13	1.04	
21+680.00	755.16	754.08	1.09	
21+700.00	755.01	753.97	1.04	
21+718.69	754.93	753.88	1.05	
21+720.00	754.94	753.87	1.07	
21+740.00	755.16	753.77	1.39	
21+760.00	755.32	753.67	1.65	
21+768.55	755.35	753.63	1.72	
21+780.00	755.33	753.57	1.76	
21+800.00	755.34	753.47	1.87	
21+808.23	755.40	753.43	1.97	
21+820.00	755.47	753.37	2.11	
21+840.00	755.37	753.26	2.10	
21+860.00	755.41	753.16	2.24	
21+880.00	755.26	753.06	2.20	
21+887.33	755.19	753.02	2.17	
21+900.00	754.68	752.96	1.72	
21+920.00	754.25	752.86	1.39	
21+940.00	753.57	751.99	1.58	
21+960.00	752.40	751.11	1.28	
21+980.00	752.08	750.24	1.84	
21+982.46	752.06	750.13	1.93	
22+000.00	750.66	749.37	1.29	
22+020.00	749.87	748.49	1.37	
22+040.00	749.42	748.39	1.03	
22+060.00	749.35	748.29	1.05	
22+061.98	749.43	748.28	1.15	
22+080.00	749.49	748.19	1.30	
22+100.00	749.69	748.09	1.60	
22+120.00	749.60	747.99	1.60	
22+130.59	749.90	747.94	1.96	
22+140.00	749.53	747.89	1.63	
22+160.00	749.16	747.26	1.90	
22+180.00	748.64	746.62	2.02	
22+200.00	747.73	745.99	1.74	
22+220.00	747.23	745.36	1.88	
22+240.00	746.31	744.72	1.59	
22+250.24	745.92	744.40	1.53	
22+260.00	745.50	744.09	1.42	
22+280.00	744.50	743.45	1.04	
22+300.00	744.19	742.82	1.38	
22+320.00	743.55	742.18	1.37	
22+340.00	743.27	742.02	1.25	
22+360.00	742.62	741.87	0.75	
22+377.66	742.62	741.73	0.89	
22+380.00	742.63	741.71	0.92	
22+400.00	742.74	741.55	1.19	
22+420.00	742.81	741.40	1.42	
22+440.00	742.98	741.24	1.74	
22+460.00	742.75	741.08	1.67	
22+480.00	742.57	740.93	1.64	
22+499.48	742.31	740.77	1.54	
22+500.00	742.30	740.77	1.55	
22+520.00	741.80	740.23	1.58	
22+540.00	741.22	739.69	1.53	
22+560.00	740.11	739.14	0.97	
22+580.00	739.17	738.60	0.57	
22+591.03	740.12	738.55	1.57	
22+600.00	740.09	738.50	1.59	
22+620.00	740.27	738.40	1.87	
22+640.00	740.32	738.30	2.02	
22+660.00	740.04	738.20	1.84	
22+680.00	740.03	738.10	1.93	
22+692.96	739.92	738.03	1.88	
22+700.00	739.71	738.00	1.71	
22+710.30	739.64	737.95	1.70	
22+720.00	739.79	737.90	1.89	
22+740.00	739.88	737.80	2.08	
22+760.00	739.58	737.70	1.88	
22+780.00	739.47	737.60	1.87	
22+800.00	739.24	737.50	1.74	

SLOPE OF PIPE (H/V): -1:197.33 | -1:22.91 | -1:199.03 | -1:31.51 | -1:127.33 | -1:36.93 | -1:199.06 | -1:36.05

REFERENCE PEG NO.: TP 298, TP 299, TP 300, TP 301, TP 302, TP 303, TP 304, TP 305, TP 306, TP 307, TP 308, TP 309, TP 310, TP 311, TP 312

LONGITUDINAL SECTION

0 100 200m

NOTES:

1. CONTOUR LEVELS ARE IN METERS AT TWO METER INTERVALS
2. GRID VALUES ARE IN METERS AT 200 METER INTERVALS
3. GEOLOGICAL CONDITIONS INDICATED ON DRAWING ARE FOR GENERAL GUIDANCE ONLY
4. MINIMUM PIPELINE SLOPES TO BE 1:200
5. DRAWING TO BE READ IN CONJUCTION WITH STANDARD DRAWINGS

LEGEND:

- ROAD (TARMAC)
- ROAD / TRACK (EARTH / MURRAM)
- FENCE / HEDGE
- 1480 CONTOURS
- ELECTRIC POST
- CULVERT
- GATE
- TEMPORARY STRUCTURES
- BUILDINGS
- PROPOSED TREATED WATER GRAVITY MAIN
- TP10 TRAVERSE POINT & No.
- TRIAL HOLE
- 30° HORIZONTAL BEND (H) OR VERTICAL BEND (V) WITH ANGLE INDICATED
- RIVER/STREAM
- V.J. VIKING JOHNSON
- GV GATE VALVE
- SV-01 SECTIONAL VALVE & No.
- WO-01 WASHOUT VALVE & No.
- SAV-01 AIR VALVE & No.
- WM WATER METER
- PROPOSED MASONRY CHAMBER
- PROPOSED VALVE BOX
- n PIPELINE GRADIENT WITH SLOPE DIRECTION (SLOPE MIN. OR 1 IN n)

ISSUED FOR CONSTRUCTION

REVISIONS		SIGN	DATE	APPROVED
	BY			
	CHECKED			
	BY			
	CHECKED			
	BY			
	CHECKED			
	BY			
	CHECKED			

CLIENT:
THE CHIEF EXECUTIVE OFFICER
TANA WATER WORKS DEVELOPMENT AGENCY
P.O BOX 1292 - 10100,
NYERI, KENYA

CONSULTING ENGINEERS:
MANGAT I.B PATEL(MIBP) LIMITED
P.O BOX 48674,00100-GPO,
NAIROBI, KENYA
E-MAIL: mibp.nairobi@mibp.co.ke
TEL: +254-20-2710500

PROJECT TITLE:
KENYA TOWNS SUSTAINABLE WATER SUPPLY AND SANITATION PROGRAM

CONTRACT No.TWSB/ADB/003/2019-2020
CONSTRUCTION OF CHUKA AND CHOGORIA WATER SUPPLY AND SANITATION PROJECT

LOT 1: CHUKA WATER SUPPLY

DRAWING TITLE:
TREATED WATER GRAVITY MAIN
KATHWANA LINE
PLAN & LONGITUDINAL SECTION
CH. 21+600.00 - 22+800.00
SHEET 19 OF 26

Designed by: A.M.I	Drawn by: P.W.K
Checked by: N.J.N	Approved by: N.J.N
Scale: H- 1:4000, V- 1:400	Date: FEB 2024

DRG No. M407/CK/TWKT/19 REV

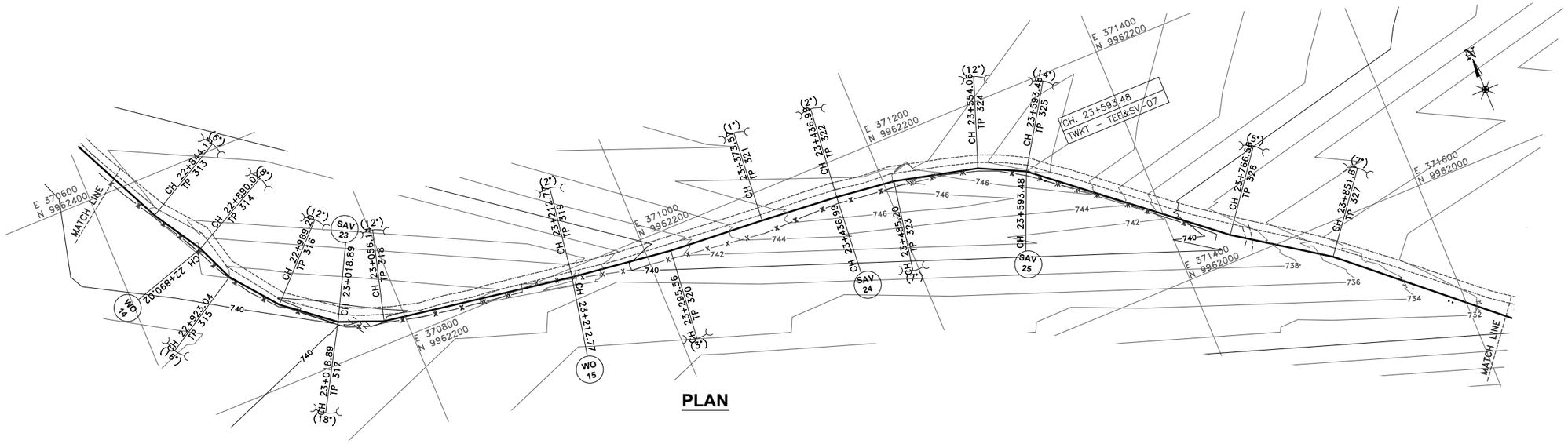

PLAN

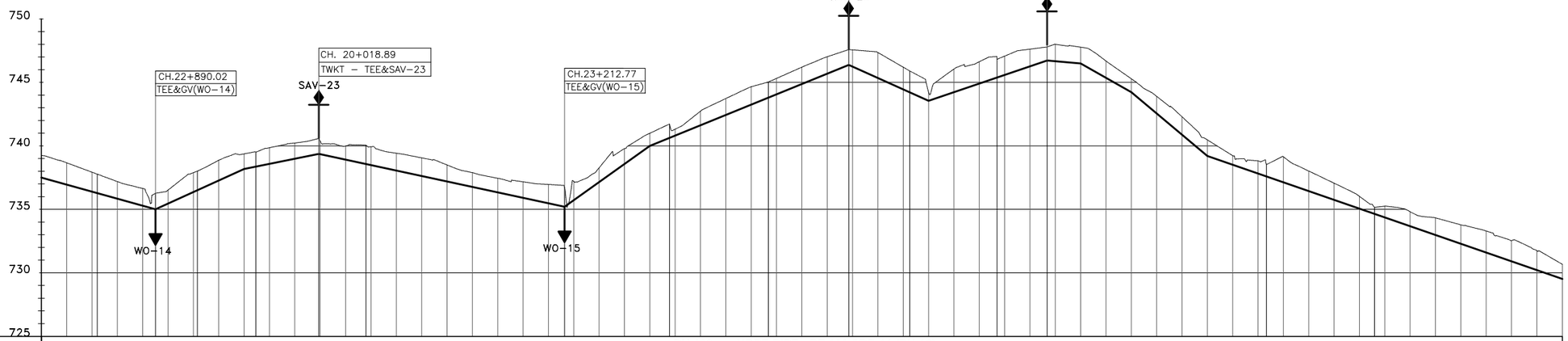

DATUM (m)

TYPE OF PIPE AND SIZE: DN 160mm HDPE PIPE - PE 100 SDR 11 (PN 16)

GEOLOGICAL CONDITION: RED LOAM SOIL

CHAINAGE (m)	EXISTING GROUND LEVEL (m)	INVERT LEVELS (m)	DEPTH OF INVERT (m)
22+800.00	739.24	737.50	1.74
22+820.00	738.67	736.94	1.72
22+840.00	737.92	736.39	1.54
22+844.13	737.77	736.27	1.50
22+860.00	737.19	735.83	1.35
22+880.00	736.64	735.28	1.37
22+890.02	736.27	735.00	1.27
22+900.00	736.52	735.45	1.07
22+920.00	737.89	736.36	1.53
22+923.04	738.01	736.50	1.51
22+940.00	738.87	737.27	1.60
22+960.00	739.37	738.18	1.19
22+969.20	739.50	738.36	1.14
22+980.00	739.86	738.58	1.27
23+000.00	740.22	738.99	1.24
23+018.89	740.58	739.37	1.21
23+020.00	740.38	739.34	1.03
23+040.00	739.99	738.92	1.07
23+056.14	740.05	738.57	1.48
23+060.00	739.93	738.49	1.45
23+080.00	739.42	738.06	1.37
23+100.00	739.06	737.63	1.43
23+120.00	738.50	737.20	1.30
23+140.00	737.90	736.77	1.13
23+160.00	737.45	736.34	1.11
23+180.00	737.17	735.91	1.26
23+200.00	736.96	735.48	1.48
23+212.77	736.73	735.21	1.53
23+220.00	737.20	735.72	1.48
23+240.00	737.15	736.27	1.12
23+260.00	739.78	738.57	1.21
23+280.00	740.99	740.00	0.99
23+295.56	741.72	740.63	1.09
23+300.00	741.31	740.81	0.50
23+320.00	742.73	741.62	1.11
23+340.00	743.73	742.44	1.29
23+360.00	744.66	743.25	1.41
23+373.57	745.03	743.80	1.23
23+380.00	745.31	744.06	1.25
23+400.00	746.20	744.87	1.33
23+420.00	747.02	745.69	1.33
23+436.99	747.58	746.38	1.21
23+440.00	747.56	746.24	1.32
23+460.00	747.35	745.35	2.01
23+480.00	746.20	744.45	1.75
23+485.20	745.90	744.22	1.68
23+500.00	744.24	743.56	0.68
23+520.00	746.05	744.23	1.81
23+540.00	746.62	744.91	1.71
23+554.06	746.82	745.39	1.44
23+560.00	747.07	745.59	1.48
23+580.00	747.62	746.27	1.35
23+593.48	747.79	746.72	1.07
23+600.00	748.00	746.67	1.34
23+620.00	747.77	746.49	1.28
23+640.00	746.68	745.36	1.32
23+660.00	745.28	744.23	1.05
23+680.00	743.90	742.55	1.35
23+700.00	742.29	740.87	1.42
23+720.00	740.47	739.20	1.28
23+740.00	739.23	738.50	0.72
23+760.00	738.82	737.81	1.01
23+766.56	738.53	737.59	0.94
23+780.00	739.14	737.12	2.02
23+800.00	738.02	736.43	1.59
23+820.00	737.06	735.74	1.32
23+840.00	736.02	735.05	0.97
23+851.81	735.16	734.64	0.52
23+860.00	735.25	734.36	0.89
23+880.00	734.81	733.67	1.14
23+900.00	734.33	732.97	1.35
23+920.00	733.78	732.28	1.50
23+940.00	733.30	731.59	1.70
23+960.00	732.54	730.90	1.64
23+980.00	731.74	730.21	1.53
24+000.00	730.67	729.52	1.16

SLOPE OF PIPE (H/V): −1:199.06, −1:36.05, 1:22.04, 1:49.37, −1:46.57, 1:14.02, 1:24.63, −1:22.35, 1:29.53, −1:116.66, −1:17.66, −1:11.92, −1:28.93, −1:20.57

REFERENCE PEG NO.: TP 313, TP 314, TP 315, TP 316, TP 317, TP 318, TP 319, TP 320, TP 321, TP 322, TP 323, TP 324, TP 325, TP 326, TP 327

LONGITUDINAL SECTION

0 100 200m

NOTES:

1. CONTOUR LEVELS ARE IN METERS AT TWO METER INTERVALS
2. GRID VALUES ARE IN METERS AT 200 METER INTERVALS
3. GEOLOGICAL CONDITIONS INDICATED ON DRAWING ARE FOR GENERAL GUIDANCE ONLY
4. MINIMUM PIPELINE SLOPES TO BE 1:200
5. DRAWING TO BE READ IN CONJUCTION WITH STANDARD DRAWINGS

LEGEND:

- ROAD (TARMAC)
- ROAD / TRACK (EARTH / MURRAM)
- FENCE / HEDGE
- 1480 CONTOURS
- ELECTRIC POST
- CULVERT
- GATE
- TEMPORARY STRUCTURES
- BUILDINGS
- PROPOSED TREATED WATER GRAVITY MAIN
- TP10 TRAVERSE POINT & No.
- TRIAL HOLE
- 30° HORIZONTAL BEND (H) OR VERTICAL BEND (V) WITH ANGLE INDICATED
- RIVER/STREAM
- V.J. VIKING JOHNSON
- GV GATE VALVE
- SV-01 SECTIONAL VALVE & No.
- WO-01 WASHOUT VALVE & No.
- SAV-01 AIR VALVE & No.
- WM WATER METER
- PROPOSED MASONRY CHAMBER
- PROPOSED VALVE BOX
- n PIPELINE GRADIENT WITH SLOPE DIRECTION (SLOPE MIN. OR 1 IN n)

ISSUED FOR CONSTRUCTION

REVISIONS		SIGN	DATE	APPROVED
	BY			
	CHECKED			
	BY			
	CHECKED			
	BY			
	CHECKED			
	BY			
	CHECKED			

CLIENT:
THE CHIEF EXECUTIVE OFFICER
TANA WATER WORKS DEVELOPMENT AGENCY
P.O BOX 1292 - 10100,
NYERI, KENYA

CONSULTING ENGINEERS:
MANGAT I.B PATEL(MIBP) LIMITED
P.O BOX 48674,00100-GPO,
NAIROBI, KENYA
E-MAIL: mibp.nairobi@mibp.co.ke
TEL: +254-20-2710500

PROJECT TITLE:
KENYA TOWNS SUSTAINABLE WATER SUPPLY AND SANITATION PROGRAM

CONTRACT No.TWSB/ADB/003/2019-2020
CONSTRUCTION OF CHUKA AND CHOGORIA WATER SUPPLY AND SANITATION PROJECT

LOT 1: CHUKA WATER SUPPLY

DRAWING TITLE:
TREATED WATER GRAVITY MAIN KATHWANA LINE PLAN & LONGITUDINAL SECTION CH. 22+800.00 - 24+000.00
SHEET 20 OF 26

Designed by: A.M.I	Drawn by: P.W.K
Checked by: N.J.N	Approved by: N.J.N
Scale: H- 1:4000, V- 1:400	Date: FEB 2024
DRG No. M407/CK/TWKT/20	REV

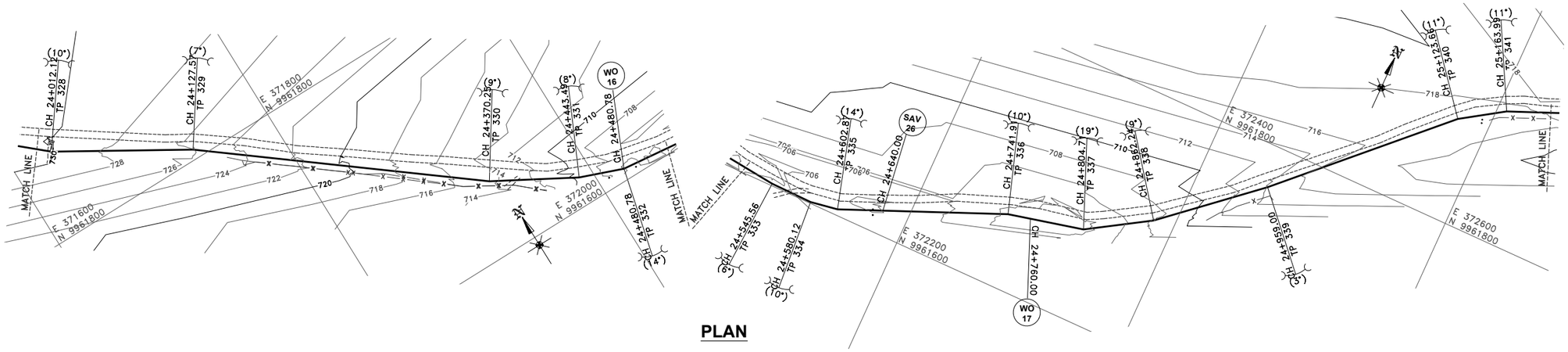

PLAN

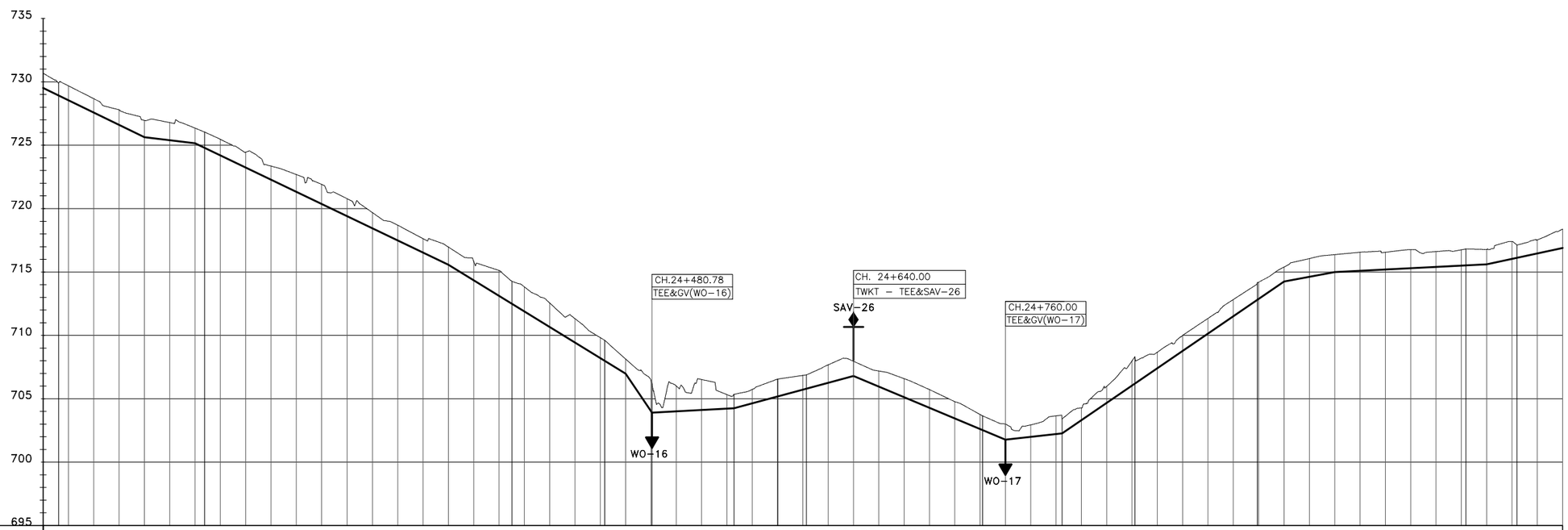

DATUM (m)

TYPE OF PIPE AND SIZE: DN 160mm HDPE PIPE - PE 100 SDR 11 (PN 16)

GEOLOGICAL CONDITION: RED LOAM SOIL

CHAINAGE (m)	EXISTING GROUND LEVEL (m)	INVERT LEVELS (m)	DEPTH OF INVERT (m)
24+000.00	730.67	729.52	1.16
24+012.12	729.89	728.93	0.96
24+020.00	729.68	728.55	1.14
24+040.00	728.67	727.57	1.10
24+060.00	727.79	726.60	1.19
24+080.00	726.95	725.63	1.32
24+100.00	726.79	725.39	1.39
24+120.00	726.35	725.15	1.19
24+127.57	726.04	724.79	1.25
24+140.00	725.46	724.20	1.27
24+160.00	724.45	723.24	1.22
24+180.00	723.35	722.28	1.08
24+200.00	722.69	721.32	1.37
24+220.00	721.91	720.36	1.55
24+240.00	720.78	719.40	1.38
24+260.00	719.69	718.44	1.25
24+280.00	718.70	717.48	1.22
24+300.00	717.63	716.52	1.11
24+320.00	716.97	715.56	1.41
24+340.00	715.85	714.34	1.52
24+360.00	715.12	713.11	2.01
24+370.25	714.26	712.48	1.78
24+380.00	713.83	711.88	1.95
24+400.00	712.56	710.65	1.91
24+420.00	711.32	709.43	1.90
24+440.00	709.82	708.20	1.63
24+443.49	709.61	707.98	1.63
24+460.00	708.13	706.97	1.16
24+480.00	706.47	704.02	2.45
24+480.78	706.22	703.91	2.31
24+500.00	706.01	704.01	2.00
24+520.00	706.52	704.12	2.40
24+540.00	705.33	704.23	1.10
24+545.56	705.35	704.26	1.09
24+560.00	705.74	704.65	1.09
24+580.00	706.55	705.19	1.36
24+580.12	706.56	705.19	1.36
24+600.00	706.84	705.73	1.12
24+602.87	706.88	705.80	1.08
24+620.00	707.68	706.26	1.41
24+640.00	707.96	706.80	1.15
24+660.00	707.19	705.96	1.23
24+680.00	706.58	705.12	1.46
24+700.00	705.72	704.29	1.44
24+720.00	704.77	703.45	1.33
24+740.00	703.76	702.61	1.15
24+741.91	703.65	702.53	1.12
24+760.00	703.01	701.77	1.24
24+780.00	702.94	702.00	0.95
24+800.00	703.65	702.22	1.43
24+804.71	703.41	702.27	1.14
24+820.00	704.27	703.32	0.95
24+840.00	705.98	704.69	1.30
24+860.00	707.99	706.05	1.94
24+862.24	708.32	706.20	2.12
24+880.00	708.68	707.42	1.26
24+900.00	710.01	708.78	1.22
24+920.00	711.34	710.15	1.19
24+940.00	712.83	711.52	1.31
24+959.00	714.17	712.82	1.36
24+960.00	714.19	712.88	1.31
24+980.00	715.39	714.25	1.14
25+000.00	716.06	714.63	1.44
25+020.00	716.37	715.00	1.37
25+040.00	716.56	715.10	1.46
25+060.00	716.55	715.20	1.35
25+080.00	716.76	715.30	1.46
25+100.00	716.61	715.40	1.21
25+120.00	716.75	715.50	1.25
25+123.66	716.82	715.52	1.30
25+140.00	716.78	715.60	1.17
25+160.00	717.41	716.03	1.38
25+163.99	717.12	716.12	1.01
25+180.00	717.53	716.46	1.07
25+200.00	718.38	716.89	1.50

SLOPE OF PIPE (H/V): -1:28.93 -1:20.57 -1:84.16 -1:20.85 -1:16.29 -1:8.79 1:185.02 1:37.16 -1:23.85 1:88.67 1:14.64 1:53.35 1:198.60 1:46.75 1:25.70

REFERENCE PEG NO.: TP 328, TP 329, TP 330, TP 331, TP 332, TP 333, TP 334, TP 335, TP 336, TP 337, TP 338, TP 339, TP 340, TP 341

LONGITUDINAL SECTION

0 100 200m

NOTES:

1. CONTOUR LEVELS ARE IN METERS AT TWO METER INTERVALS
2. GRID VALUES ARE IN METERS AT 200 METER INTERVALS
3. GEOLOGICAL CONDITIONS INDICATED ON DRAWING ARE FOR GENERAL GUIDANCE ONLY
4. MINIMUM PIPELINE SLOPES TO BE 1:200
5. DRAWING TO BE READ IN CONJUCTION WITH STANDARD DRAWINGS

LEGEND:

- ROAD (TARMAC)
- ROAD / TRACK (EARTH / MURRAM)
- FENCE / HEDGE
- 1480 CONTOURS
- ELECTRIC POST
- CULVERT
- GATE
- TEMPORARY STRUCTURES
- BUILDINGS
- PROPOSED TREATED WATER GRAVITY MAIN
- TP10 TRAVERSE POINT & No.
- TRIAL HOLE
- 30° HORIZONTAL BEND (H) OR VERTICAL BEND (V) WITH ANGLE INDICATED
- RIVER/STREAM
- V.J. VIKING JOHNSON
- GV GATE VALVE
- SV-01 SECTIONAL VALVE & No.
- WO-01 WASHOUT VALVE & No.
- SAV-01 AIR VALVE & No.
- WM WATER METER
- PROPOSED MASONRY CHAMBER
- PROPOSED VALVE BOX
- n PIPELINE GRADIENT WITH SLOPE DIRECTION (SLOPE MIN. OR 1 IN n)

ISSUED FOR CONSTRUCTION

REVISIONS		SIGN	DATE	APPROVED
	BY			
	CHECKED			
	BY			
	CHECKED			
	BY			
	CHECKED			
	BY			
	CHECKED			

CLIENT:
THE CHIEF EXECUTIVE OFFICER
TANA WATER WORKS DEVELOPMENT AGENCY
P.O BOX 1292 - 10100,
NYERI, KENYA

CONSULTING ENGINEERS:
MANGAT I.B PATEL(MIBP) LIMITED
P.O BOX 48674,00100-GPO,
NAIROBI, KENYA
E-MAIL: mibp.nairobi@mibp.co.ke
TEL: +254-20-2710500

PROJECT TITLE:
KENYA TOWNS SUSTAINABLE WATER SUPPLY AND SANITATION PROGRAM

CONTRACT No.TWSB/ADB/003/2019-2020

CONSTRUCTION OF CHUKA AND CHOGORIA WATER SUPPLY AND SANITATION PROJECT

LOT 1: CHUKA WATER SUPPLY

DRAWING TITLE:
TREATED WATER GRAVITY MAIN KATHWANA LINE PLAN & LONGITUDINAL SECTION CH. 24+000.00 - 25+200.00

SHEET 21 OF 26

Designed by:	A.M.I	Drawn by:	P.W.K
Checked by:	N.J.N	Approved by:	N.J.N
Scale:	H- 1:4000, V- 1:400	Date:	FEB 2024

DRG No. M407/CK/TWKT/21 REV

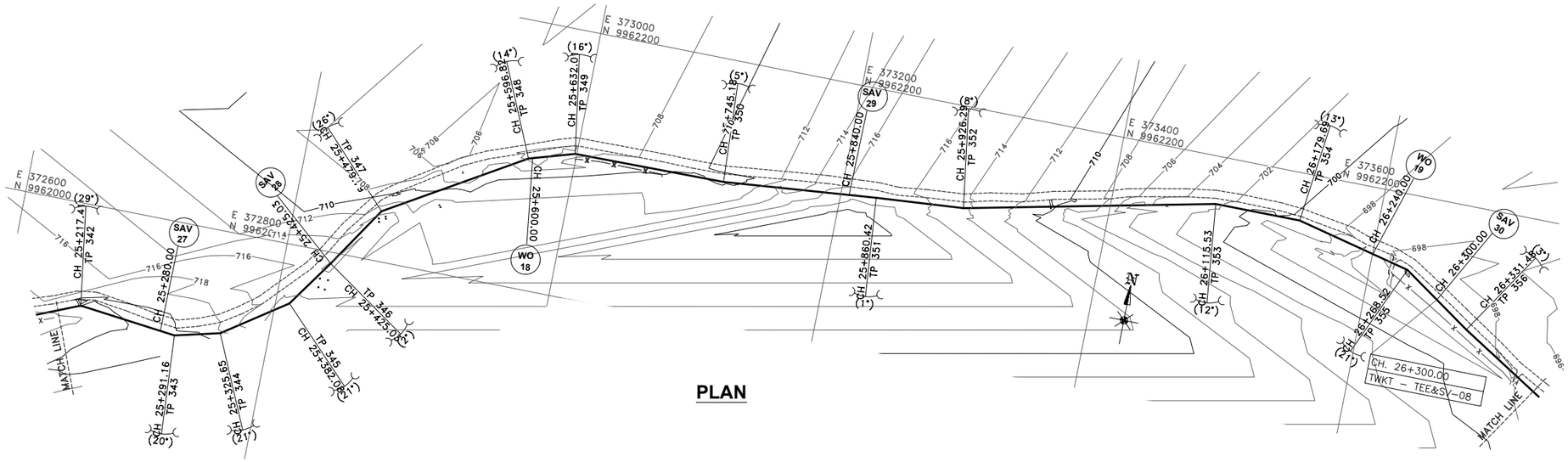

PLAN

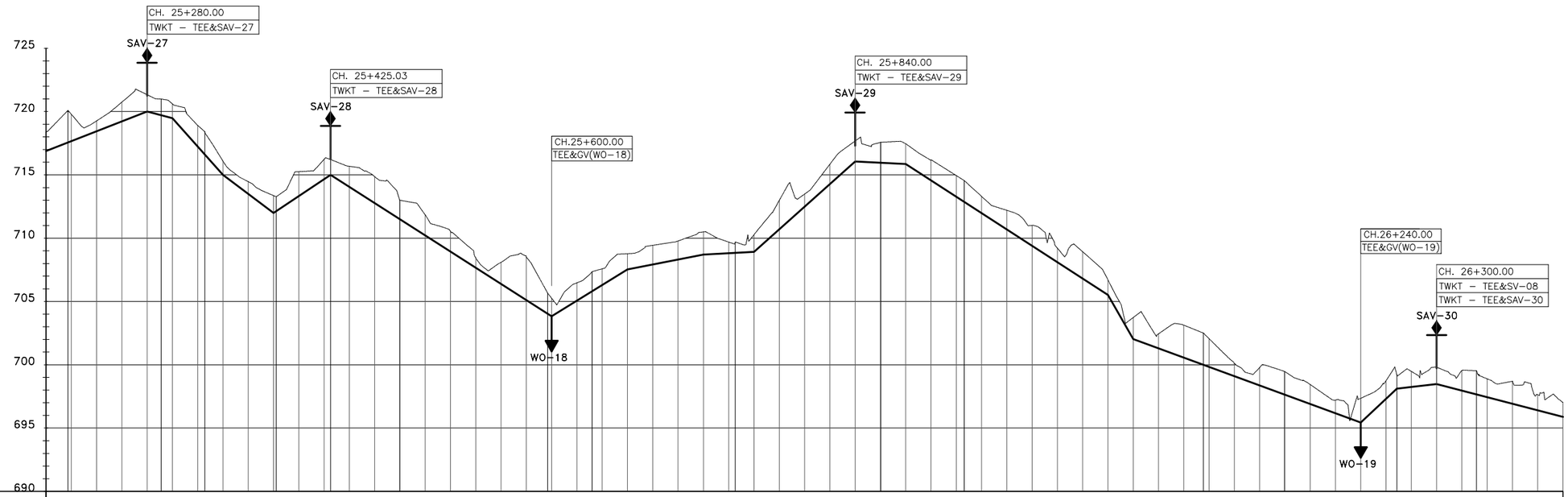

TYPE OF PIPE AND SIZE: DN 160mm HDPE PIPE - PE 100 SDR 11 (PN 16)

GEOLOGICAL CONDITION: RED LOAM SOIL

CHAINAGE (m)	EXISTING GROUND LEVEL (m)	INVERT LEVELS (m)	DEPTH OF INVERT (m)
25+200.00	718.38	716.89	1.50
25+217.41	720.10	717.57	2.53
25+220.00	719.79	717.67	2.13
25+240.00	719.26	718.44	0.82
25+260.00	720.75	719.22	1.52
25+280.00	721.33	720.00	1.33
25+291.16	720.99	719.71	1.28
25+300.00	720.61	719.48	1.13
25+320.00	718.91	717.24	1.68
25+325.65	718.42	716.61	1.81
25+340.00	716.08	715.00	1.08
25+360.00	714.46	713.50	0.97
25+380.00	713.36	711.99	1.37
25+382.08	713.27	712.13	1.14
25+400.00	715.26	713.33	1.93
25+420.00	716.23	714.66	1.57
25+425.03	716.22	715.00	1.22
25+440.00	715.68	714.05	1.63
25+460.00	714.86	712.77	2.09
25+479.79	713.00	711.51	1.49
25+480.00	712.99	711.49	1.50
25+500.00	711.83	710.22	1.62
25+520.00	710.54	708.94	1.60
25+540.00	708.43	707.67	0.77
25+560.00	708.10	706.39	1.71
25+580.00	708.52	705.11	3.41
25+596.82	705.66	704.04	1.62
25+600.00	705.25	703.84	1.41
25+620.00	706.47	705.07	1.40
25+632.01	707.36	705.81	1.54
25+640.00	707.58	706.31	1.27
25+660.00	708.77	707.54	1.23
25+680.00	709.44	707.93	1.51
25+700.00	709.78	708.32	1.47
25+720.00	710.50	708.70	1.79
25+740.00	709.69	708.81	0.88
25+745.18	709.70	708.84	0.86
25+760.00	710.27	708.92	1.35
25+780.00	712.98	710.71	2.27
25+800.00	713.48	712.49	0.99
25+820.00	715.83	714.27	1.56
25+840.00	717.67	716.06	1.61
25+860.00	717.57	715.96	1.61
25+860.42	717.58	715.95	1.62
25+880.00	717.46	715.85	1.61
25+900.00	716.16	714.56	1.60
25+920.00	714.95	713.27	1.68
25+926.29	714.55	712.86	1.69
25+940.00	713.31	711.98	1.33
25+960.00	712.20	710.68	1.52
25+980.00	711.01	709.39	1.62
26+000.00	709.22	708.10	1.12
26+020.00	708.93	706.81	2.12
26+040.00	706.71	705.52	1.20
26+060.00	703.73	702.03	1.70
26+080.00	702.44	701.30	1.14
26+100.00	703.13	700.56	2.57
26+115.53	702.50	700.00	2.51
26+120.00	702.06	699.83	2.23
26+140.00	700.10	699.10	1.00
26+160.00	699.79	698.37	1.42
26+179.69	699.48	697.65	1.83
26+180.00	699.46	697.65	1.82
26+200.00	698.44	696.90	1.54
26+220.00	697.21	696.17	1.04
26+240.00	697.35	695.44	1.92
26+260.00	698.75	697.31	1.43
26+268.52	699.22	698.11	1.11
26+280.00	699.48	698.24	1.24
26+300.00	699.81	698.47	1.34
26+320.00	699.53	697.96	1.58
26+331.48	699.53	697.66	1.87
26+340.00	698.89	697.44	1.45
26+360.00	698.70	696.92	1.78
26+380.00	697.63	696.40	1.23
26+400.00	697.05	695.88	1.16

SLOPE OF PIPE (H/V): 1:46.75, 1:25.70, –1:38.13, –1:8.94, –1:13.29, 1:14.97, –1:15.67, 1:16.21, 1:51.52, 1:184.81, 1:11.21, –1:194.09, –1:15.48, –1:5.74, –1:27.30, 1:10.67, 1:86.46, –1:38.58, –1:151.37

REFERENCE PEG NO.: TP 342, TP 343, TP 344, TP 345, TP 346, TP 347, TP 348, TP 349, TP 350, TP 351, TP 352, TP 353, TP 354, TP 355, TP 356

LONGITUDINAL SECTION

0 100 200m

NOTES:

1. CONTOUR LEVELS ARE IN METERS AT TWO METER INTERVALS
2. GRID VALUES ARE IN METERS AT 200 METER INTERVALS
3. GEOLOGICAL CONDITIONS INDICATED ON DRAWING ARE FOR GENERAL GUIDANCE ONLY
4. MINIMUM PIPELINE SLOPES TO BE 1:200
5. DRAWING TO BE READ IN CONJUCTION WITH STANDARD DRAWINGS

LEGEND:

- ROAD (TARMAC)
- ROAD / TRACK (EARTH / MURRAM)
- FENCE / HEDGE
- 1480 CONTOURS
- ELECTRIC POST
- CULVERT
- GATE
- TEMPORARY STRUCTURES
- BUILDINGS
- PROPOSED TREATED WATER GRAVITY MAIN
- TP10 TRAVERSE POINT & No.
- TRIAL HOLE
- 30° HORIZONTAL BEND (H) OR VERTICAL BEND (V) WITH ANGLE INDICATED
- RIVER/STREAM
- V.J. VIKING JOHNSON
- GV GATE VALVE
- SV-01 SECTIONAL VALVE & No.
- WO-01 WASHOUT VALVE & No.
- SAV-01 AIR VALVE & No.
- WM WATER METER
- PROPOSED MASONRY CHAMBER
- PROPOSED VALVE BOX
- n PIPELINE GRADIENT WITH SLOPE DIRECTION (SLOPE MIN. OR 1 IN n)

ISSUED FOR CONSTRUCTION

REVISIONS		SIGN	DATE	APPROVED
	BY			
	CHECKED			
	BY			
	CHECKED			
	BY			
	CHECKED			
	BY			
	CHECKED			

CLIENT: THE CHIEF EXECUTIVE OFFICER
TANA WATER WORKS DEVELOPMENT AGENCY
P.O BOX 1292 - 10100,
NYERI, KENYA

CONSULTING ENGINEERS:
MANGAT I.B PATEL(MIBP) LIMITED
P.O BOX 48674,00100-GPO,
NAIROBI, KENYA
E-MAIL: mibp.nairobi@mibp.co.ke
TEL: +254-20-2710500

PROJECT TITLE:
KENYA TOWNS SUSTAINABLE WATER SUPPLY AND SANITATION PROGRAM

CONTRACT No.TWSB/ADB/003/2019-2020
CONSTRUCTION OF CHUKA AND CHOGORIA WATER SUPPLY AND SANITATION PROJECT

LOT 1: CHUKA WATER SUPPLY

DRAWING TITLE:
TREATED WATER GRAVITY MAIN KATHWANA LINE PLAN & LONGITUDINAL SECTION CH. 25+200.00 - 26+400.00
SHEET 22 OF 26

Designed by:	A.M.I	Drawn by:	P.W.K
Checked by:	N.J.N	Approved by:	N.J.N
Scale:	H- 1:4000, V- 1:400	Date:	FEB 2024

DRG No. M407/CK/TWKT/22 REV

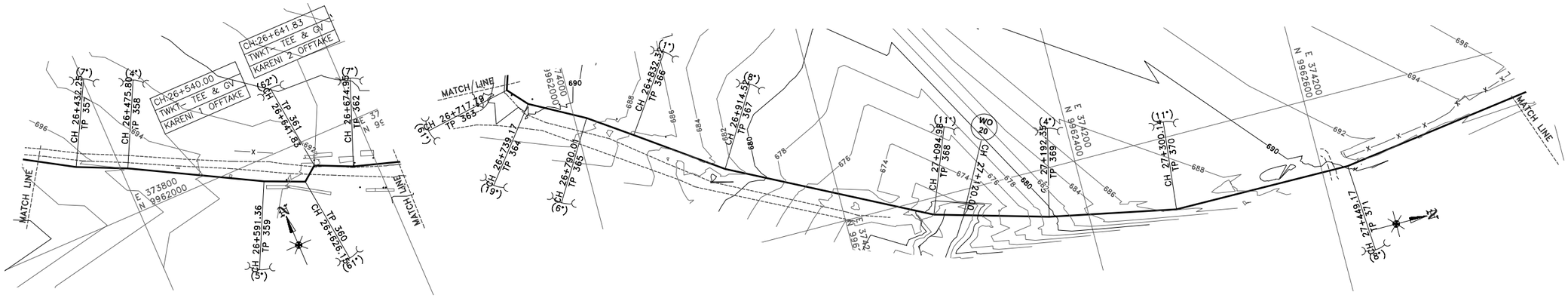

PLAN

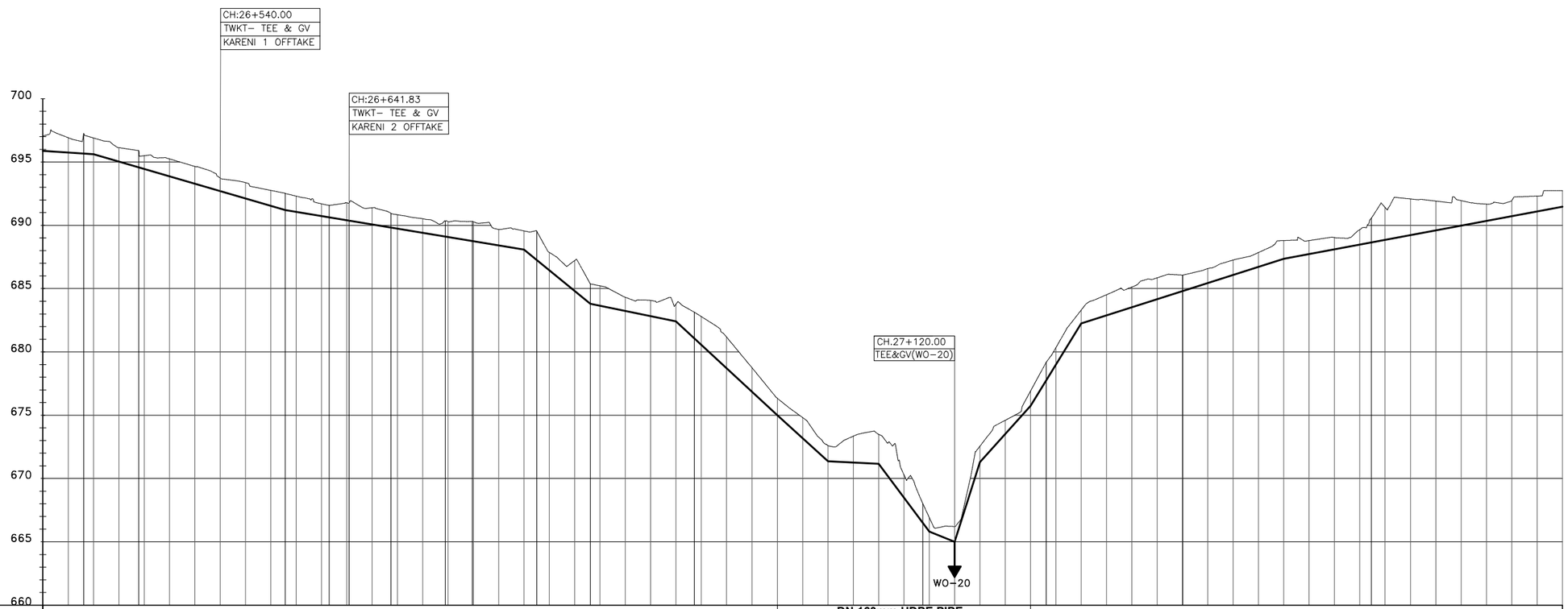

TYPE OF PIPE AND SIZE	DN 160mm HDPE PIPE - PE 100 SDR 11 (PN 16) / DN 160mm HDPE PIPE - PE 100 SDR 7,4 (PN 25) / DN 160mm HDPE PIPE - PE 100 SDR 11 (PN 16)
GEOLOGICAL CONDITION	RED LOAM SOIL

CHAINAGE (m)	EXISTING GROUND LEVEL (m)	INVERT LEVELS (m)	DEPTH OF INVERT (m)
26+400.00	697.05	695.88	1.16
26+420.00	696.92	695.75	1.17
26+432.25	697.25	695.67	1.58
26+440.00	696.90	695.62	1.28
26+460.00	696.14	695.04	1.10
26+475.80	695.90	694.58	1.32
26+480.00	695.50	694.45	1.04
26+500.00	695.25	693.87	1.38
26+520.00	694.65	693.29	1.36
26+540.00	693.74	692.71	1.04
26+560.00	693.37	692.12	1.25
26+580.00	692.76	691.54	1.22
26+591.36	692.53	691.21	1.32
26+600.00	692.31	691.07	1.24
26+620.00	691.70	690.74	0.96
26+626.15	691.57	690.63	0.93
26+640.00	691.77	690.41	1.37
26+641.83	691.74	690.38	1.36
26+660.00	691.38	690.07	1.31
26+674.95	690.93	689.83	1.10
26+680.00	690.83	689.74	1.09
26+700.00	690.52	689.41	1.11
26+717.79	690.34	689.12	1.23
26+720.00	690.29	689.08	1.21
26+739.17	690.32	688.76	1.55
26+740.00	690.28	688.75	1.53
26+760.00	689.67	688.42	1.25
26+780.00	689.56	688.09	1.47
26+790.01	689.53	687.27	2.26
26+800.00	687.86	686.45	1.41
26+820.00	687.22	684.81	2.41
26+832.32	685.37	683.80	1.57
26+840.00	685.22	683.64	1.58
26+860.00	684.31	683.23	1.08
26+880.00	684.06	682.82	1.24
26+900.00	683.77	682.41	1.36
26+914.52	683.14	681.07	2.07
26+920.00	682.79	680.56	2.23
26+940.00	681.16	678.71	2.46
26+960.00	678.75	676.85	1.90
26+980.00	676.34	675.00	1.34
27+000.00	674.82	673.18	1.64
27+020.00	672.59	671.36	1.23
27+040.00	673.34	671.26	2.09
27+060.00	673.49	671.16	2.34
27+080.00	670.31	668.49	1.82
27+094.98	668.01	666.49	1.52
27+100.00	666.92	665.82	1.10
27+120.00	666.21	665.00	1.21
27+140.00	672.55	671.29	1.27
27+160.00	674.60	673.51	1.09
27+180.00	676.91	675.74	1.17
27+192.35	679.19	677.75	1.44
27+200.00	680.33	678.99	1.34
27+220.00	683.30	682.25	1.06
27+240.00	684.51	682.89	1.63
27+260.00	685.12	683.52	1.60
27+280.00	685.85	684.16	1.69
27+300.00	686.07	684.80	1.27
27+300.14	686.07	684.81	1.26
27+320.00	686.58	685.44	1.14
27+340.00	687.26	686.08	1.18
27+360.00	687.85	686.72	1.13
27+380.00	688.79	687.36	1.44
27+400.00	688.79	687.73	1.07
27+420.00	689.03	688.10	0.93
27+440.00	689.65	688.47	1.18
27+449.17	690.57	688.65	1.92
27+460.00	691.41	688.85	2.56
27+480.00	692.08	689.22	2.86
27+500.00	691.91	689.59	2.32
27+520.00	691.95	689.97	1.98
27+540.00	691.67	690.34	1.33
27+560.00	691.95	690.71	1.23
27+580.00	692.31	691.09	1.22
27+600.00	692.74	691.46	1.28

SLOPE OF PIPE (H/V)	REFERENCE PEG NO.
–1:38.38	TP 357
–1:51.37	TP 358
–1:34.34	TP 359
–1:60.44	TP 360
–1:12.20	TP 361
–1:48.84	TP 362
–1:10.79	TP 363
–1:10.98	TP 364
–1:199.23	TP 365
–1:7.49	TP 366
–1:24.48	TP 367
1:3.18	TP 368
1:8.98	TP 369
1:6.15	TP 370
1:31.32	TP 371
1:53.59	
1:23.7	

LONGITUDINAL SECTION

0 100 200m

NOTES:

1. CONTOUR LEVELS ARE IN METERS AT TWO METER INTERVALS
2. GRID VALUES ARE IN METERS AT 200 METER INTERVALS
3. GEOLOGICAL CONDITIONS INDICATED ON DRAWING ARE FOR GENERAL GUIDANCE ONLY
4. MINIMUM PIPELINE SLOPES TO BE 1:200
5. DRAWING TO BE READ IN CONJUCTION WITH STANDARD DRAWINGS

LEGEND:

- ROAD (TARMAC)
- ROAD / TRACK (EARTH / MURRAM)
- FENCE / HEDGE
- 1480 CONTOURS
- ELECTRIC POST
- CULVERT
- GATE
- TEMPORARY STRUCTURES
- BUILDINGS
- PROPOSED TREATED WATER GRAVITY MAIN
- TP10 TRAVERSE POINT & No.
- TRIAL HOLE
- 30° HORIZONTAL BEND (H) OR VERTICAL BEND (V) WITH ANGLE INDICATED
- RIVER/STREAM
- V.J. VIKING JOHNSON
- GV GATE VALVE
- SV-01 SECTIONAL VALVE & No.
- WO-01 WASHOUT VALVE & No.
- SAV-01 AIR VALVE & No.
- WM WATER METER
- PROPOSED MASONRY CHAMBER
- PROPOSED VALVE BOX
- n PIPELINE GRADIENT WITH SLOPE DIRECTION (SLOPE MIN. OR 1 IN n)

ISSUED FOR CONSTRUCTION

REVISIONS		SIGN	DATE	APPROVED
	BY			
	CHECKED			
	BY			
	CHECKED			
	BY			
	CHECKED			
	BY			
	CHECKED			

CLIENT:
THE CHIEF EXECUTIVE OFFICER
TANA WATER WORKS DEVELOPMENT AGENCY
P.O BOX 1292 - 10100,
NYERI, KENYA

CONSULTING ENGINEERS:
MANGAT I.B PATEL(MIBP) LIMITED
P.O BOX 48674,00100-GPO,
NAIROBI, KENYA
E-MAIL: mibp.nairobi@mibp.co.ke
TEL: +254-20-2710500

PROJECT TITLE:
KENYA TOWNS SUSTAINABLE WATER SUPPLY AND SANITATION PROGRAM

CONTRACT No.TWSB/ADB/003/2019-2020
CONSTRUCTION OF CHUKA AND CHOGORIA WATER SUPPLY AND SANITATION PROJECT

LOT 1: CHUKA WATER SUPPLY

DRAWING TITLE:
TREATED WATER GRAVITY MAIN
KATHWANA LINE
PLAN & LONGITUDINAL SECTION
CH. 26+400.00 - 27+600.00
SHEET 23 OF 26

Designed by:	A.M.I	Drawn by:	P.W.K
Checked by:	N.J.N	Approved by:	N.J.N
Scale:	H- 1:4000, V- 1:400	Date:	FEB 2024

DRG No. M407/CK/TWKT/23 REV

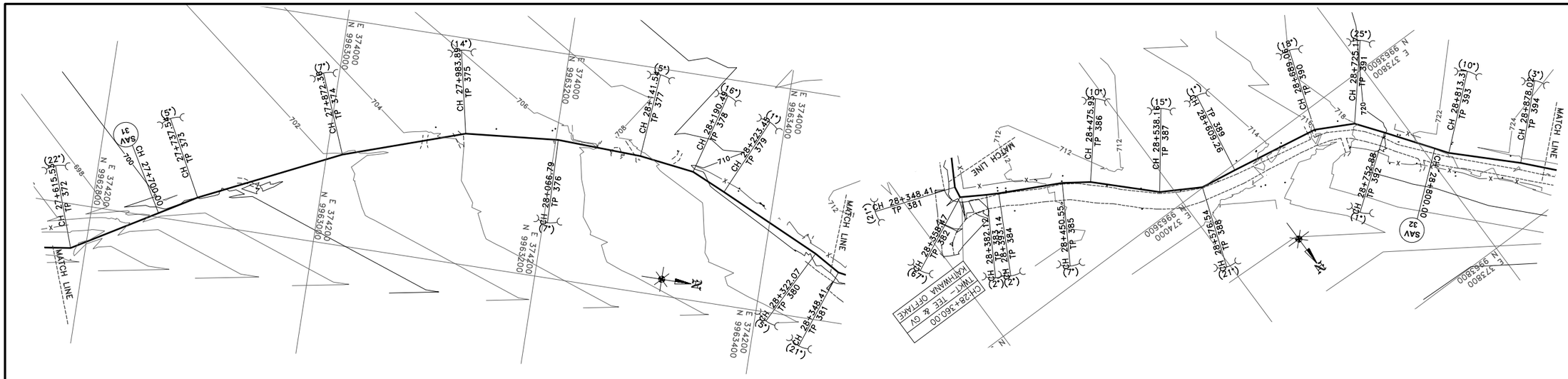

PLAN

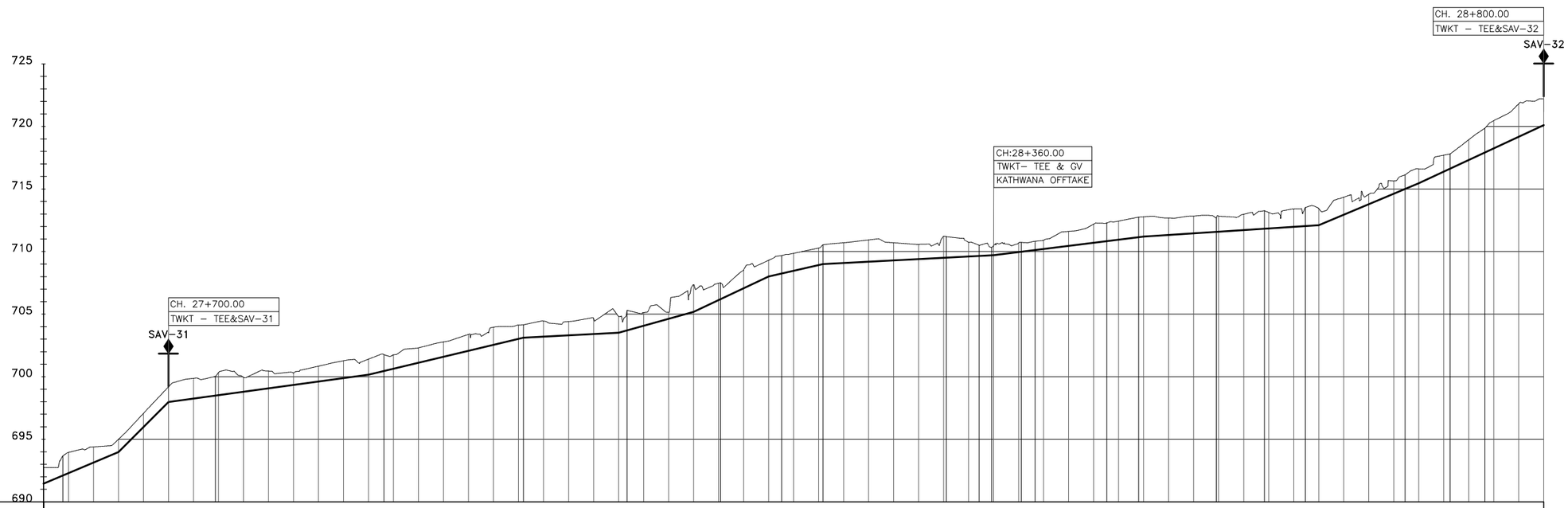

TYPE OF PIPE AND SIZE: DN 160mm HDPE PIPE - PE 100 SDR 11 (PN 16)

GEOLOGICAL CONDITION: RED LOAM SOIL

REFERENCE PEG NO.	EXISTING GROUND LEVEL (m)	INVERT LEVELS (m)	CHAINAGE (m)	DEPTH OF INVERT (m)
TP 372	692.74	691.46	27+600.00	1.28
	693.67	692.11	27+615.53	1.56
	693.95	692.30	27+620.00	1.65
	694.39	693.14	27+640.00	1.25
	695.00	693.99	27+660.00	1.01
TP 373	697.07	695.98	27+680.00	1.09
	699.19	697.98	27+700.00	1.21
	699.87	698.25	27+720.00	1.62
	700.03	698.49	27+737.54	1.53
	700.32	698.53	27+740.00	1.79
	699.96	698.80	27+760.00	1.16
	700.45	699.07	27+780.00	1.38
	700.30	699.35	27+800.00	0.95
	700.84	699.62	27+820.00	1.23
	701.28	699.89	27+840.00	1.38
	701.41	700.16	27+860.00	1.24
TP 374	701.76	700.46	27+872.36	1.30
	701.75	700.64	27+880.00	1.11
	702.31	701.12	27+900.00	1.19
	702.78	701.59	27+920.00	1.19
	703.38	702.07	27+940.00	1.32
	703.95	702.54	27+960.00	1.41
TP 375	704.12	703.02	27+980.00	1.11
	704.15	703.11	27+983.89	1.04
	704.45	703.20	28+000.00	1.25
	704.41	703.30	28+020.00	1.10
	704.64	703.41	28+040.00	1.23
TP 376	704.82	703.52	28+060.00	1.30
	705.31	703.71	28+066.79	1.60
	705.13	704.07	28+080.00	1.05
	705.15	704.63	28+100.00	0.53
	707.35	705.18	28+120.00	2.17
TP 377	707.47	706.12	28+140.00	1.34
	707.50	706.20	28+141.54	1.31
	708.54	707.07	28+160.00	1.48
	709.30	708.01	28+180.00	1.29
TP 378	709.88	708.25	28+190.49	1.43
	709.86	708.47	28+200.00	1.39
TP 379	710.28	708.93	28+220.00	1.35
	710.54	709.01	28+223.45	1.54
	710.71	709.09	28+240.00	1.61
	710.93	709.20	28+260.00	1.74
	710.70	709.30	28+280.00	1.41
	710.57	709.40	28+300.00	1.17
TP 380	711.23	709.50	28+320.00	1.73
	711.19	709.52	28+322.07	1.68
	710.74	709.61	28+340.00	1.14
TP 381	710.49	709.65	28+348.41	0.84
TP 382	710.32	709.70	28+358.47	0.61
TP 383	710.48	709.71	28+360.00	0.77
	710.68	709.96	28+380.00	0.73
TP 384	710.73	709.98	28+382.12	0.75
	710.82	710.12	28+393.14	0.70
	710.91	710.20	28+400.00	0.71
	711.62	710.45	28+420.00	1.16
TP 385	712.19	710.70	28+440.00	1.49
	712.28	710.83	28+450.55	1.45
	712.44	710.95	28+460.00	1.49
	712.75	711.14	28+475.93	1.61
TP 386	712.78	711.19	28+480.00	1.59
	712.68	711.32	28+500.00	1.36
	712.84	711.45	28+520.00	1.39
TP 387	712.68	711.57	28+538.16	1.10
	712.83	711.58	28+540.00	1.25
	712.98	711.71	28+560.00	1.27
TP 388	713.27	711.82	28+576.54	1.45
	713.13	711.84	28+580.00	1.28
TP 389	713.38	711.97	28+600.00	1.41
	713.52	712.03	28+609.26	1.49
	713.44	712.10	28+620.00	1.34
	714.34	712.94	28+640.00	1.40
	714.57	713.78	28+660.00	0.79
TP 390	715.65	714.62	28+680.00	1.02
	716.12	715.00	28+689.06	1.12
	716.61	715.46	28+700.00	1.14
TP 391	717.70	716.39	28+720.00	1.31
	717.80	716.63	28+725.17	1.17
	718.94	717.32	28+740.00	1.62
TP 392	719.86	717.92	28+752.88	1.94
	720.46	718.25	28+760.00	2.22
	721.81	719.18	28+780.00	2.63
	722.19	720.11	28+800.00	2.09

SLOPE OF PIPE (H/V): 1:53.59, 1:23.75, 1:10.01, 1:73.28, 1:42.06, 1:186.59, 1:36.09, 1:21.22, 1:43.52, 1:193.97, 1:80.93, 1:153.98, 1:23.79, 1:21.55, 1:183.35

LONGITUDINAL SECTION

0 100 200m

NOTES:

1. CONTOUR LEVELS ARE IN METERS AT TWO METER INTERVALS
2. GRID VALUES ARE IN METERS AT 200 METER INTERVALS
3. GEOLOGICAL CONDITIONS INDICATED ON DRAWING ARE FOR GENERAL GUIDANCE ONLY
4. MINIMUM PIPELINE SLOPES TO BE 1:200
5. DRAWING TO BE READ IN CONJUCTION WITH STANDARD DRAWINGS

LEGEND:

- ROAD (TARMAC)
- ROAD / TRACK (EARTH / MURRAM)
- FENCE / HEDGE
- 1480 CONTOURS
- ELECTRIC POST
- CULVERT
- GATE
- TEMPORARY STRUCTURES
- BUILDINGS
- PROPOSED TREATED WATER GRAVITY MAIN
- TP10 TRAVERSE POINT & No.
- TRIAL HOLE
- 30° HORIZONTAL BEND (H) OR VERTICAL BEND (V) WITH ANGLE INDICATED
- RIVER/STREAM
- V.J. VIKING JOHNSON
- GV GATE VALVE
- SV-01 SECTIONAL VALVE & No.
- WO-01 WASHOUT VALVE & No.
- SAV-01 AIR VALVE & No.
- WM WATER METER
- PROPOSED MASONRY CHAMBER
- PROPOSED VALVE BOX
- n PIPELINE GRADIENT WITH SLOPE DIRECTION (SLOPE MIN. OR 1 IN n)

ISSUED FOR CONSTRUCTION

REVISIONS		SIGN	DATE	APPROVED
	BY			
	CHECKED			
	BY			
	CHECKED			
	BY			
	CHECKED			
	BY			
	CHECKED			

CLIENT:
THE CHIEF EXECUTIVE OFFICER
TANA WATER WORKS DEVELOPMENT AGENCY
P.O BOX 1292 - 10100,
NYERI, KENYA

CONSULTING ENGINEERS:
MANGAT I.B PATEL(MIBP) LIMITED
P.O BOX 48674,00100-GPO,
NAIROBI, KENYA
E-MAIL: mibp.nairobi@mibp.co.ke
TEL: +254-20-2710500

PROJECT TITLE:
KENYA TOWNS SUSTAINABLE WATER SUPPLY AND SANITATION PROGRAM

CONTRACT No.TWSB/ADB/003/2019-2020
CONSTRUCTION OF CHUKA AND CHOGORIA WATER SUPPLY AND SANITATION PROJECT

LOT 1: CHUKA WATER SUPPLY

DRAWING TITLE:
TREATED WATER GRAVITY MAIN KATHWANA LINE PLAN & LONGITUDINAL SECTION CH. 27+600.00 - 28+800.00
SHEET 24 OF 26

Designed by:	A.M.I	Drawn by:	P.W.K
Checked by:	N.J.N	Approved by:	N.J.N
Scale:	H- 1:4000, V- 1:400	Date:	FEB 2024
DRG No.	M407/CK/TWKT/24	REV	

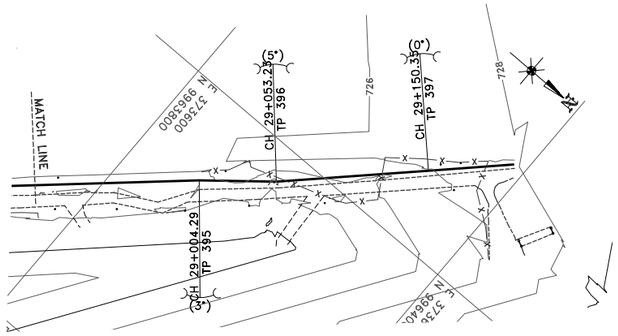

PLAN

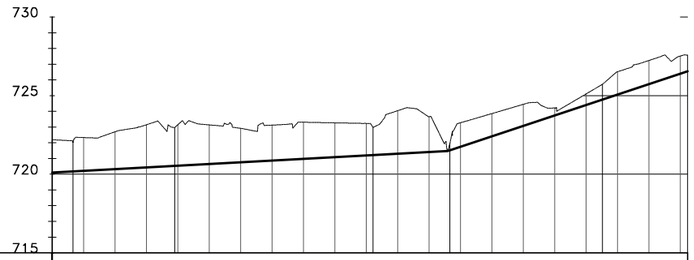

DATUM (m)																											
TYPE OF PIPE AND SIZE	DN 160mm HDPE PIPE - PE 100 SDR 11 (PN 16)																										
GEOLOGICAL CONDITION	RED LOAM SOIL																										
EXISTING GROUND LEVEL (m)	722.19	722.10	722.33	722.70	723.15	722.96	723.14	723.14	722.92	723.12	723.31	723.27	723.24	722.98	724.04	723.66	721.48	721.96	723.28	723.86	724.45	724.21	725.11	725.72	726.52	727.24	727.52	727.58
INVERT LEVELS (m)	720.11	720.18	720.21	720.32	720.43	720.53	720.54	720.65	720.76	720.87	720.98	721.09	721.20	721.22	721.30	721.41	721.48	721.52	721.75	722.41	723.08	723.74	724.41	724.75	725.07	725.73	726.40	726.55
CHAINAGE (m)	28+800.00	28+813.31	28+820.00	28+840.00	28+860.00	28+878.02	28+880.00	28+900.00	28+920.00	28+940.00	28+960.00	28+980.00	29+000.00	29+004.29	29+020.00	29+040.00	29+051.86	29+053.23	29+060.00	29+080.00	29+100.00	29+120.00	29+140.00	29+150.35	29+160.00	29+180.00	29+200.00	29+204.57
DEPTH OF INVERT (m)	2.08	1.92	2.12	2.37	2.71	2.43	2.60	2.49	2.16	2.26	2.33	2.18	2.04	1.76	2.74	2.25	0.00	0.44	1.53	1.45	1.37	0.47	0.71	0.97	1.45	1.50	1.12	1.03
SLOPE OF PIPE (H/V)	1:21.55				1:183.35													1:30.11										
REFERENCE PEG NO.	TP 393					TP 394								TP 395			TP 396						TP 397					

LONGITUDINAL SECTION

0 100 200m

NOTES:

1. CONTOUR LEVELS ARE IN METERS AT TWO METER INTERVALS
2. GRID VALUES ARE IN METERS AT 200 METER INTERVALS
3. GEOLOGICAL CONDITIONS INDICATED ON DRAWING ARE FOR GENERAL GUIDANCE ONLY
4. MINIMUM PIPELINE SLOPES TO BE 1:200
5. DRAWING TO BE READ IN CONJUCTION WITH STANDARD DRAWINGS

LEGEND:

- ROAD (TARMAC)
- ROAD / TRACK (EARTH / MURRAM)
- FENCE / HEDGE
- 1480 — CONTOURS
- ELECTRIC POST
- CULVERT
- GATE
- TEMPORARY STRUCTURES
- BUILDINGS
- PROPOSED TREATED WATER GRAVITY MAIN
- TP10 — TRAVERSE POINT & No.
- TRIAL HOLE
- 30° — HORIZONTAL BEND (H) OR VERTICAL BEND (V) WITH ANGLE INDICATED
- RIVER/STREAM
- V.J. — VIKING JOHNSON
- GV — GATE VALVE
- SV-01 — SECTIONAL VALVE & No.
- WO-01 — WASHOUT VALVE & No.
- SAV-01 — AIR VALVE & No.
- WM — WATER METER
- PROPOSED MASONRY CHAMBER
- PROPOSED VALVE BOX
- n — PIPELINE GRADIENT WITH SLOPE DIRECTION (SLOPE MIN. OR 1 IN n)

ISSUED FOR CONSTRUCTION

	REVISIONS		SIGN	DATE	APPROVED
		BY			
		CHECKED			
		BY			
		CHECKED			
		BY			
		CHECKED			
		BY			
		CHECKED			

CLIENT:
THE CHIEF EXECUTIVE OFFICER
TANA WATER WORKS DEVELOPMENT AGENCY
P.O BOX 1292 - 10100,
NYERI, KENYA

CONSULTING ENGINEERS:
MANGAT I.B PATEL(MIBP) LIMITED
P.O BOX 48674,00100-GPO,
NAIROBI, KENYA
E-MAIL: mibp.nairobi@mibp.co.ke
TEL: +254-20-2710500

PROJECT TITLE:
KENYA TOWNS SUSTAINABLE WATER SUPPLY AND SANITATION PROGRAM

CONTRACT No.TWSB/ADB/003/2019-2020
CONSTRUCTION OF CHUKA AND CHOGORIA WATER SUPPLY AND SANITATION PROJECT

LOT 1: CHUKA WATER SUPPLY

DRAWING TITLE:
TREATED WATER GRAVITY MAIN
KATHWANA LINE
PLAN & LONGITUDINAL SECTION
CH. 26+400.00 - 27+600.00
SHEET 25 OF 26

Designed by:	A.M.I	Drawn by:	P.W.K
Checked by:	N.J.N	Approved by:	N.J.N
Scale:	H- 1:4000, V- 1:400	Date:	FEB 2024

DRG No. M407/CK/TWKT/25 REV

DETAIL

CH. 1+060.00, 2+300.00, 4+440.00 & 5+800.00
LINE TWKT - SAV - 01, 02, 04 & 05

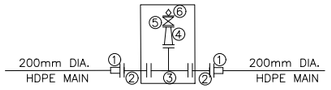

DESCRIPTION

4 Nos. REQUIRED TO PN16

1. 2 Nos. 200mm DIA. FLANGED ADAPTER(STUB END) COMPLETE WITH METAL BACK UP RING
2. 2 Nos. 200mm DIA. ALL FLANGED PIPE 1.2m LONG WITH PUDDLE FLANGE 400mm FROM FLANGED END
3. 1 No. 200x100mm DIA. ALL FLANGED TEE
4. 1 No. 100x50mm DIA. ALL FLANGED CONCENTRIC TAPER
5. 1 No. 50mm DIA. ALL FLANGED GATE VALVE (ISOLATING VALVE)
6. 1 No. 50mm DIA. SINGLE ORIFICE AIR VALVE

DETAIL

CH. 8+620.00, 9+600.00, 11+500.00, 12+571.98, 13+360.05, 13+760.00, 14+700.00, 15+720.00, 18+860.00, 19+520.00, 20+140.00, 22+140.00, 20+018.89, 23+436.99, 24+640.00, 25+280.00, 25+425.03, 25+840.00, 27+700.00 & 28+800.00
LINE TWKT - SAV - 07, 08, 10, 11, 12, 14, 15, 16, 18, 19, 20, 22, 23, 24, 26, 27, 28, 29, 31 & 32

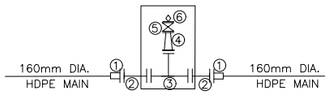

DESCRIPTION

20 Nos. REQUIRED TO PN16

1. 2 Nos. 160mm DIA. FLANGED ADAPTER(STUB END) COMPLETE WITH METAL BACK UP RING
2. 2 Nos. 150mm DIA. ALL FLANGED PIPE 1.2m LONG WITH PUDDLE FLANGE 400mm FROM FLANGED END
3. 1 No. 150x100mm DIA. ALL FLANGED TEE
4. 1 No. 100x50mm DIA. ALL FLANGED CONCENTRIC TAPER
5. 1 No. 50mm DIA. ALL FLANGED GATE VALVE (ISOLATING VALVE)
6. 1 No. 50mm DIA. SINGLE ORIFICE AIR VALVE

DETAIL

CH. 3+700.00
LINE TWKT - SV - 01
LINE TWKT - SAV - 03

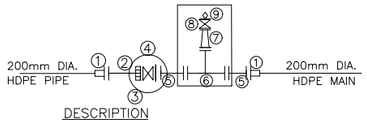

DESCRIPTION

1 No. REQUIRED TO PN16

1. 2 Nos. 200mm DIA. FLANGED ADAPTER(STUB END) COMPLETE WITH METAL BACK UP RING
2. 1 No. 200mm DIA. FLANGED SPIGOT PIPE 1.2m LONG
3. 1 No. 200mm DIA. FLANGE ADAPTOR
4. 1 No. 200mm DIA. ALL FLANGED GATE VALVE
5. 2 Nos. 200mm DIA. ALL FLANGED PIPE 1.2m LONG WITH PUDDLE FLANGE 400mm FROM FLANGED END
6. 1 No. 150x100mm DIA. ALL FLANGED TEE
7. 1 No. 100x50mm DIA. ALL FLANGED CONCENTRIC TAPER
8. 1 No. 50mm DIA. ALL FLANGED GATE VALVE (ISOLATING VALVE)
9. 1 No. 50mm DIA. SINGLE ORIFICE AIR VALVE

DETAIL

CH. 7+120.00, 10+540.00, 13+600.00, 17+440.00, 20+740.00, 23+593.48, 26+300.00
LINE TWKT - SV - 02, 03, 04, 05, 06, 07, 08
LINE TWKT - SAV - 06, 09, 13, 17, 21, 25, 30

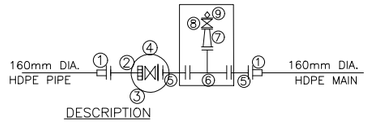

DESCRIPTION

7 Nos. REQUIRED TO PN16

1. 2 Nos. 160mm DIA. FLANGED ADAPTER(STUB END) COMPLETE WITH METAL BACK UP RING
2. 1 No. 150mm DIA. FLANGED SPIGOT PIPE 1.2m LONG
3. 1 No. 150mm DIA. FLANGE ADAPTOR
4. 1 No. 150mm DIA. ALL FLANGED GATE VALVE
5. 2 Nos. 150mm DIA. ALL FLANGED PIPE 1.2m LONG WITH PUDDLE FLANGE 400mm FROM FLANGED END
6. 1 No. 150x100mm DIA. ALL FLANGED TEE
7. 1 No. 100x50mm DIA. ALL FLANGED CONCENTRIC TAPER
8. 1 No. 50mm DIA. ALL FLANGED GATE VALVE (ISOLATING VALVE)
9. 1 No. 50mm DIA. SINGLE ORIFICE AIR VALVE

DETAIL

CH. 2+180.00, 3+622.83
LINE TWKT - WO - 01, 02

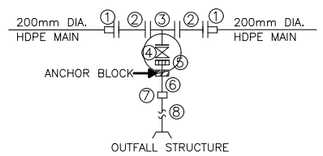

DESCRIPTION

2 Nos. REQUIRED TO PN16

1. 2 Nos. 200mm DIA. FLANGED ADAPTER(STUB END) COMPLETE WITH METAL BACK UP RING
2. 2 Nos. 200mm DIA. ALL FLANGED PIPE 1.2m LONG
3. 1 No. 200x80mm DIA. ALL FLANGED LEVEL INVERT TEE
4. 1 No. 80mm DIA. ALL FLANGED GATE VALVE
5. 1 No. 80mm DIA. FLANGE ADAPTOR
6. 1 No. 80mm DIA. PLAIN ENDED PIPE 1.2m LONG
7. 1 No. 80mm DIA. STEPPED COUPLING
8. 1 No. 90mm DIA. PN 16 HDPE PIPE WITH BUTT FUSION WELDED JONTING, LENGTH TO BE DETERMINED ON SITE, TO AN OUTFALL STRUCTURE

DETAIL

CH. 6+813.25, 7+300.60, 8+400.00, 11+220.00, 13+200.00, 13+443.83, 13+708.13, 15+680.00, 19+300.00, 20+040.00, 20+660.00, 22+890.02, 23+212.77, 24+480.78, 24+760.00, 25+600.00, 26+240.00
TWKT - WO - 03, 04, 05, 06, 07, 08, 09, 10, 11, 12, 13, 14, 15, 16, 17, 18, 19

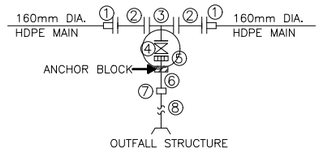

DESCRIPTION

17 Nos. REQUIRED TO PN16

1. 2 Nos. 160mm DIA. FLANGED ADAPTER(STUB END) COMPLETE WITH METAL BACK UP RING
2. 2 Nos. 150mm DIA. ALL FLANGED PIPE 1.2m LONG
3. 1 No. 150x80mm DIA. ALL FLANGED LEVEL INVERT TEE
4. 1 No. 80mm DIA. ALL FLANGED GATE VALVE
5. 1 No. 80mm DIA. FLANGE ADAPTOR
6. 1 No. 80mm DIA. PLAIN ENDED PIPE 1.2m LONG
7. 1 No. 80mm DIA. STEPPED COUPLING
8. 1 No. 90mm DIA. PN 16 HDPE PIPE WITH BUTT FUSION WELDED JONTING, LENGTH TO BE DETERMINED ON SITE, TO AN OUTFALL STRUCTURE

DETAIL

CH.27+120.00
TWKT - WO - 20

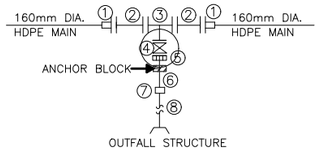

DESCRIPTION

1 No. REQUIRED TO PN25

1. 2 Nos. 160mm DIA. FLANGED ADAPTER(STUB END) COMPLETE WITH METAL BACK UP RING
2. 2 Nos. 150mm DIA. ALL FLANGED PIPE 1.2m LONG
3. 1 No. 150x80mm DIA. ALL FLANGED LEVEL INVERT TEE
4. 1 No. 80mm DIA. ALL FLANGED GATE VALVE
5. 1 No. 80mm DIA. FLANGE ADAPTOR
6. 1 No. 80mm DIA. PLAIN ENDED PIPE 1.2m LONG
7. 1 No. 80mm DIA. STEPPED COUPLING
8. 1 No. 90mm DIA. PN 16 HDPE PIPE WITH BUTT FUSION WELDED JONTING, LENGTH TO BE DETERMINED ON SITE, TO AN OUTFALL STRUCTURE

DETAIL

CH. 2+380.00, 6+300.00, 6+360.00
LINE TWKT - TEE, GV & BF

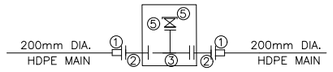

DESCRIPTION

3 Nos. REQUIRED TO PN16

1. 2 Nos. 200mm DIA. FLANGED ADAPTER(STUB END) COMPLETE WITH METAL BACK UP RING
2. 2 Nos. 200mm DIA. ALL FLANGED PIPE 1.2m LONG WITH PUDDLE FLANGE 400mm FROM FLANGED END
3. 1 No. 200x200mm DIA. ALL FLANGED TEE
4. 1 No. 200mm DIA. ALL FLANGED GATE VALVE
5. 1 No. 200mm DIA. ALL FLANGED BLANK FLANGE

DETAIL

CH. 7+760.00, 15+060.00, 17+760.00, 19+440.00, 21+140.00, 26+540.00, 26+641.83, 28+360.00
LINE TWKT - TEE, GV & BF

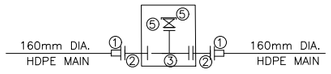

DESCRIPTION

8 Nos. REQUIRED TO PN16

1. 2 Nos. 160mm DIA. FLANGED ADAPTER(STUB END) COMPLETE WITH METAL BACK UP RING
2. 2 Nos. 150mm DIA. ALL FLANGED PIPE 1.2m LONG WITH PUDDLE FLANGE 400mm FROM FLANGED END
3. 1 No. 150x150mm DIA. ALL FLANGED TEE
4. 1 No. 150mm DIA. ALL FLANGED GATE VALVE
5. 1 No. 150mm DIA. ALL FLANGED BLANK FLANGE

0 100 200m

NOTES:

1. CONTOUR LEVELS ARE IN METERS AT TWO METER INTERVALS
2. GRID VALUES ARE IN METERS AT 200 METER INTERVALS
3. GEOLOGICAL CONDITIONS INDICATED ON DRAWING ARE FOR GENERAL GUIDANCE ONLY
4. MINIMUM PIPELINE SLOPES TO BE 1:200
5. DRAWING TO BE READ IN CONJUCTION WITH STANDARD DRAWINGS

LEGEND:

	ROAD (TARMAC)
	ROAD / TRACK (EARTH / MURRAM)
	FENCE / HEDGE
1480	CONTOURS
	ELECTRIC POST
	CULVERT
	GATE
	TEMPORARY STRUCTURES
	BUILDINGS
	PROPOSED TREATED WATER GRAVITY MAIN
TP10	TRAVERSE POINT & No.
	TRIAL HOLE
30°	HORIZONTAL BEND (H) OR VERTICAL BEND (V) WITH ANGLE INDICATED
	RIVER/STREAM
V.J.	VIKING JOHNSON
GV	GATE VALVE
SV-01	SECTIONAL VALVE & No.
WO-01	WASHOUT VALVE & No.
SAV-01	AIR VALVE & No.
WM	WATER METER
	PROPOSED MASONRY CHAMBER
	PROPOSED VALVE BOX
n	PIPELINE GRADIENT WITH SLOPE DIRECTION (SLOPE MIN. OR 1 IN n)

ISSUED FOR CONSTRUCTION

REVISIONS		SIGN	DATE	APPROVED
	BY			
	CHECKED			
	BY			
	CHECKED			
	BY			
	CHECKED			
	BY			
	CHECKED			

CLIENT:
THE CHIEF EXECUTIVE OFFICER
TANA WATER WORKS DEVELOPMENT AGENCY
P.O BOX 1292 - 10100,
NYERI, KENYA

CONSULTING ENGINEERS:
MANGAT I.B PATEL(MIBP) LIMITED
P.O BOX 48674,00100-GPO,
NAIROBI, KENYA
E-MAIL: mibp.nairobi@mibp.co.ke
TEL: +254-20-2710500

PROJECT TITLE:
KENYA TOWNS SUSTAINABLE WATER SUPPLY AND SANITATION PROGRAM

CONTRACT No.TWSB/ADB/003/2019-2020
CONSTRUCTION OF CHUKA AND CHOGORIA WATER SUPPLY AND SANITATION PROJECT

LOT 1: CHUKA WATER SUPPLY

DRAWING TITLE:
TREATED WATER GRAVITY MAIN
KATHWANA LINE
PLAN & LONGITUDINAL SECTION
PIPE FITTINGS
SHEET 26 OF 26

Designed by:	A.M.I	Drawn by:	P.W.K
Checked by:	N.J.N	Approved by:	N.J.N
Scale:	H- 1:4000, V- 1:400	Date:	FEB 2024

DRG No. M407/CK/TWKT/25 REV

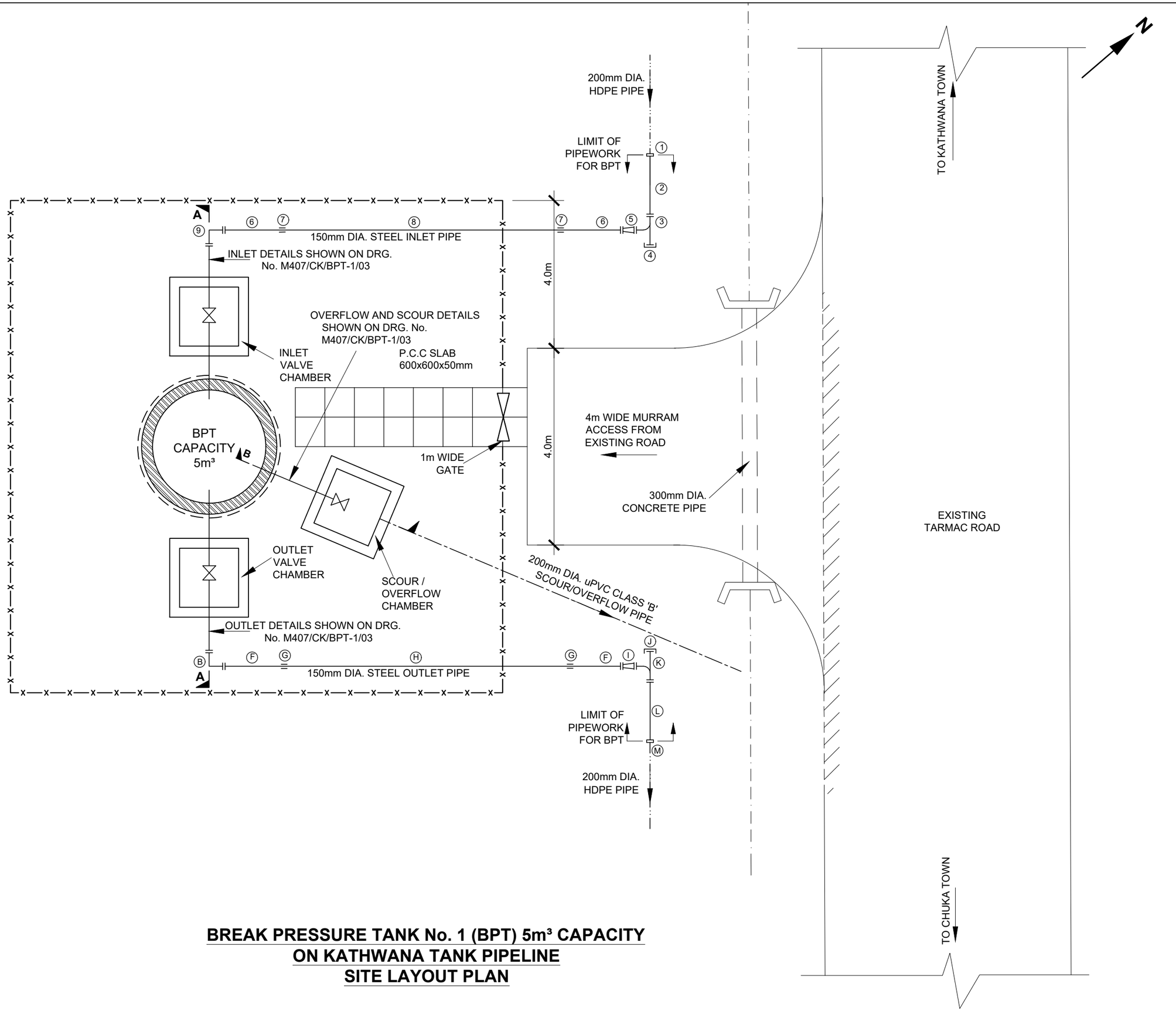

BREAK PRESSURE TANK No. 1 (BPT) 5m³ CAPACITY ON KATHWANA TANK PIPELINE SITE LAYOUT PLAN

NOTES

1. DIMENSIONS IN METERS UNLESS OTHERWISE SPECIFIED
2. ALL PIPE DIAMETERS INDICATED ARE NOMINAL SIZES.
3. THIS DRAWING TO BE READ IN CONJUCTION WITH DRG. NO. M407/CK/BPT-1/02&03
4. FOR BREAK PRESSURE TANK DETAILS SEE DRG NO. M407/CK/BPT-1/02
5. FOR DETAILS OF INLET, OUTLET & SCOUR/OVERFLOW PIPEWORK, SEE DRG. NO. M407/CK/BPT-1/02&03

LEGEND

- CHAINLINK FENCE
- GRAVITY MAIN
- SCOUR / OVERFLOW PIPE
- EARTH DRAIN
- GATE VALVE
- CHAMBER
- CULVERT WITH HEAD WALLS

ISSUED FOR CONSTRUCTION

REVISIONS		SIGN	DATE	APPROVED
	BY			
	CHECGED			
	BY			
	CHECGED			
	BY			
	CHECGED			
	BY			
	CHECGED			

CLIENT:
THE CHIEF EXECUTIVE OFFICER
TANA WATER WORKS DEVELOPMENT AGENCY
P.O BOX 1292 - 10100,
NYERI, KENYA

CONSULTING ENGINEERS:
MANGAT I.B PATEL(MIBP) LIMITED
P.O BOX 48674,00100-GPO,
NAIROBI, KENYA
E-MAIL: mibp.nairobi@mibp.co.ke
TEL: +254-2-2710500

PROJECT TITLE:
KENYA TOWNS SUSTAINABLE WATER SUPPLY AND SANITATION PROGRAM

TENDER No.TWSB/ADB/003/2019-2020
CONSTRUCTION OF CHUKA AND CHOGORIA WATER SUPPLY AND SANITATION PROJECT

LOT 1: CHUKA WATER SUPPLY

DRAWING TITLE:
BREAK PRESSURE TANK ON KATHWANA PIPELINE (CAPACITY 5m³) PLAN, SECTION & R.C. DETAILS

Designed by:	P.W.K	Drawn by:	P.W.K
Checked by:	N.J.N	Approved by:	N.J.N
Scale:	1:75	Date:	FEB 2025

DRG No. M407/CK/BPT-1/01 REV

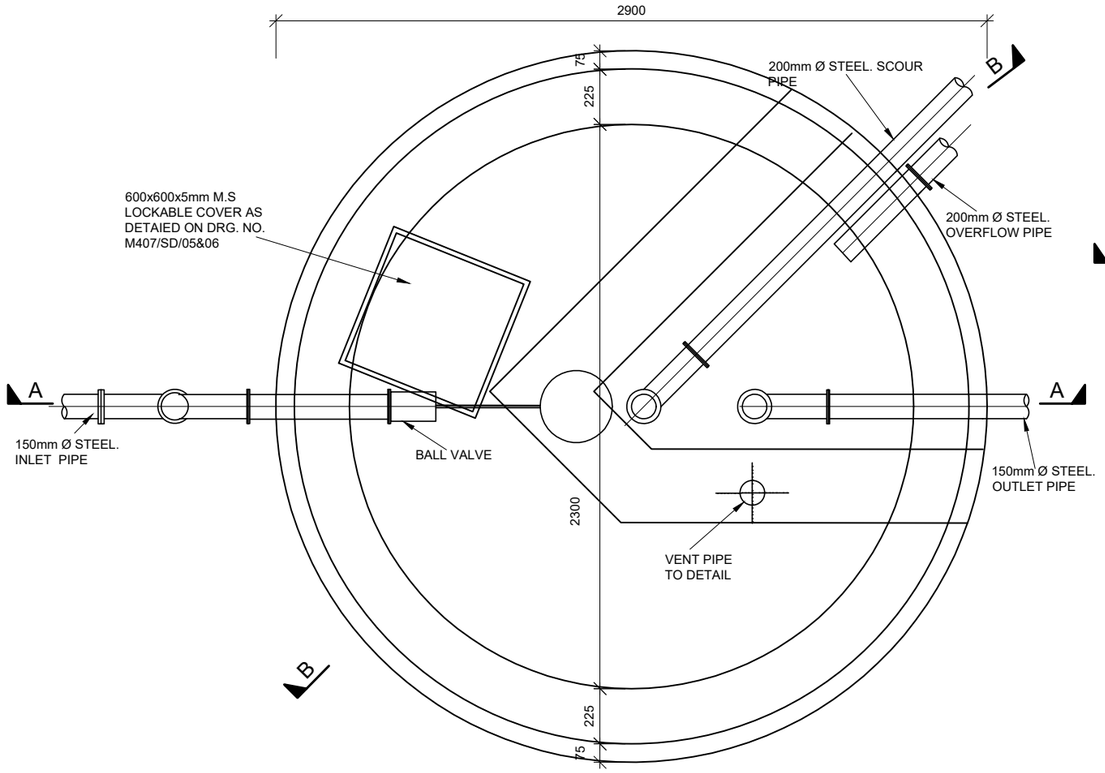

PLAN

SCALE 1 : 25

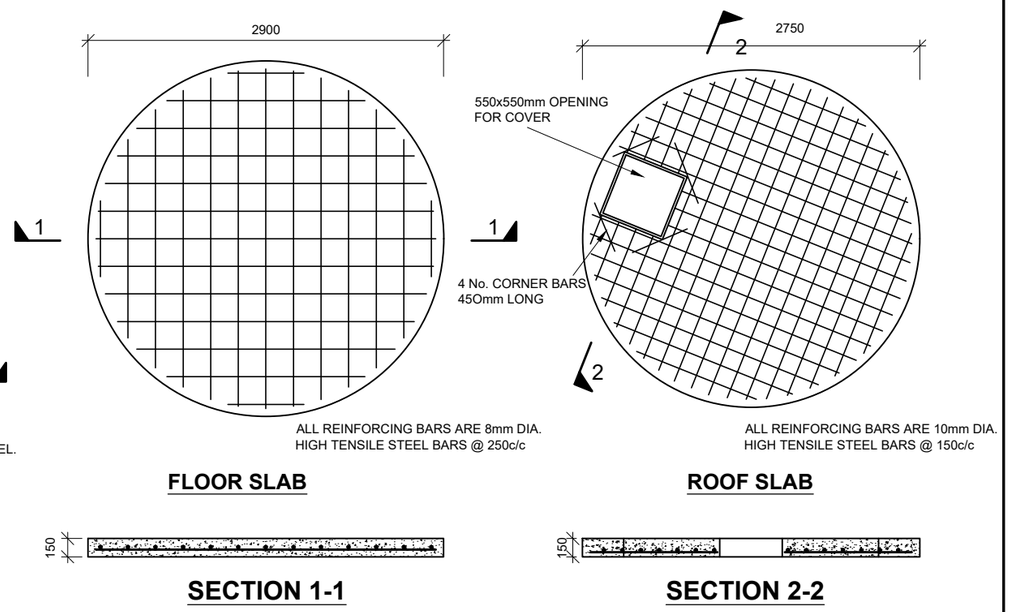

REINFORCEMENT DETAILS

SCALE 1 : 50

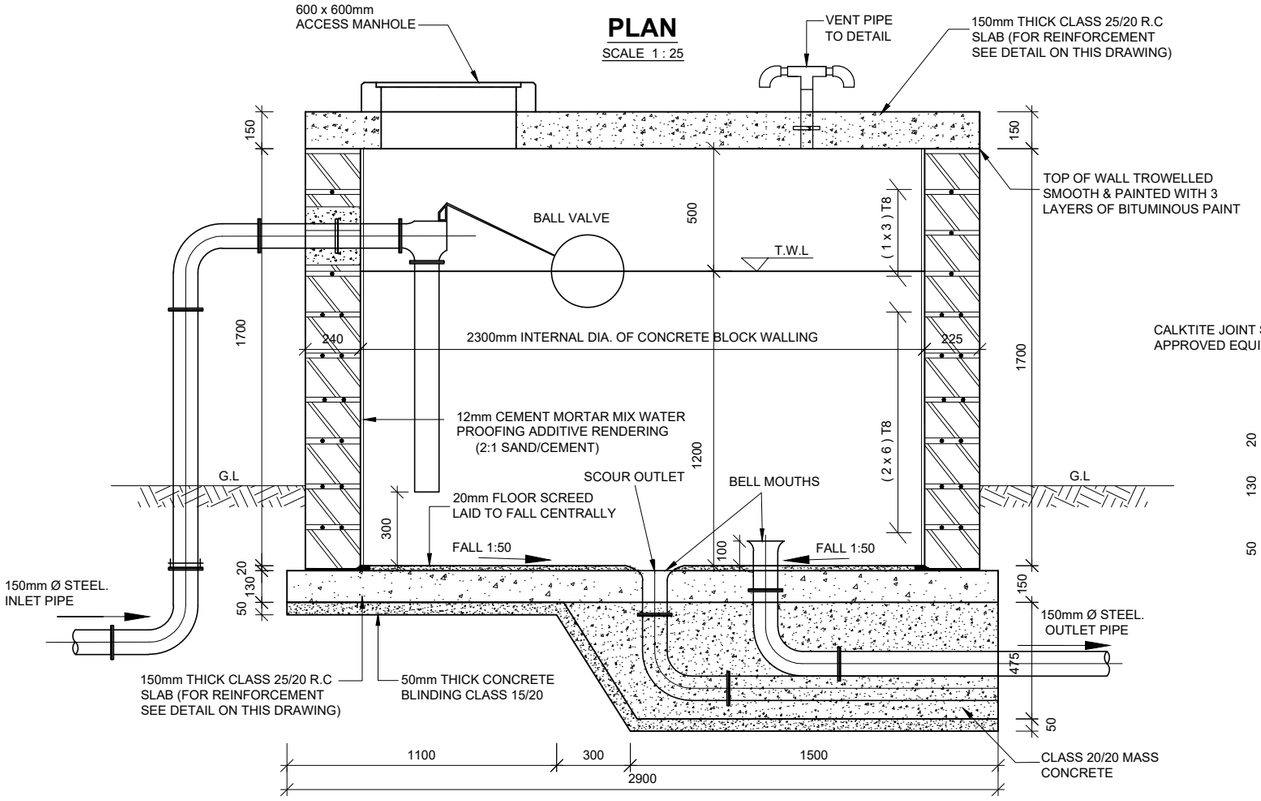

SECTION A-A

SCALE 1 : 25

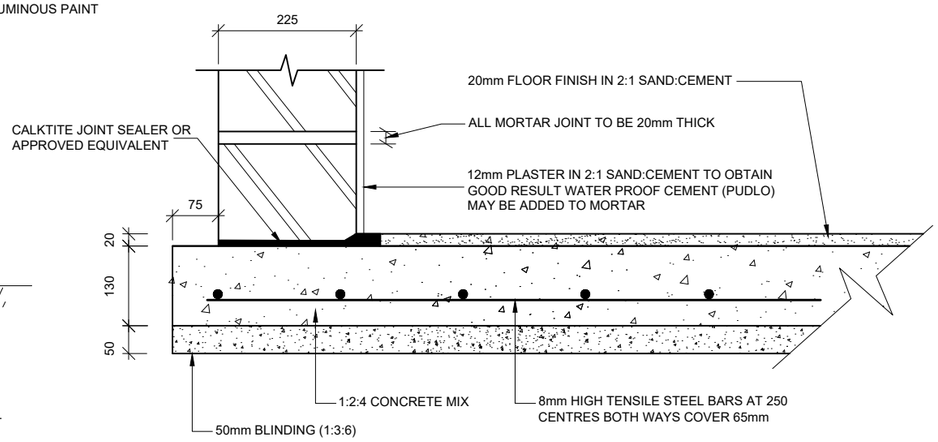

ENLARGED DETAIL AT FOOT OF WALL

SCALE 1 : 10

NOTES

1. FOR DETAILS OF SITE LAYOUT OF THE BREAK PRESSURE TANKS, REFER TO DRG. Nos. M407/CG/BPT-2/01
2. FOR DETAILS OF ALL PIPE CONNECTIONS AND FITTINGS, REFER DRG. No.M407/CG/BPT-2/03
3. ALL DIMENSIONS IN mm UNLESS SPECIFIED.

ABBREVIATIONS

1. T.W.L - TOP WATER LEVEL
2. G.L - GROUND LEVEL
3. R.C - REINFORCED CONCRETE
4. FE. - FERROUS

ISSUED FOR CONSTRUCTION

REVISIONS		SIGN	DATE	APPROVED
	BY			
	CHECKED			
	BY			
	CHECKED			
	BY			
	CHECKED			
	BY			
	CHECKED			

CLIENT:
THE CHIEF EXECUTIVE OFFICER
TANA WATER WORKS DEVELOPMENT AGENCY
P.O BOX 1292 - 10100,
NYERI, KENYA

CONSULTING ENGINEERS:
MANGAT I.B PATEL(MIBP) LIMITED
P.O BOX 48674,00100-GPO,
NAIROBI, KENYA
E-MAIL: mibp.nairobi@mibp.co.ke
TEL: +254-2-2710500

PROJECT TITLE:
KENYA TOWNS SUSTAINABLE WATER SUPPLY AND SANITATION PROGRAM

CONTRACT No.TWSB/ADB/003/2019-2020
CONSTRUCTION OF CHUKA AND CHOGORIA WATER SUPPLY AND SANITATION PROJECT

LOT 1: CHUKA WATER SUPPLY

DRAWING TITLE:
BREAK PRESSURE TANK ON KATHWANA LINE (CAPACITY 5m³) PLAN, SECTION & R.C. DETAILS

Designed by:	P.W.K	Drawn by:	P.W.K
Checked by:	N.J.N	Approved by:	N.J.N
Scale:	1:25	Date:	FEB 2025

DRG No. M407/CK/BPT-1/02 REV

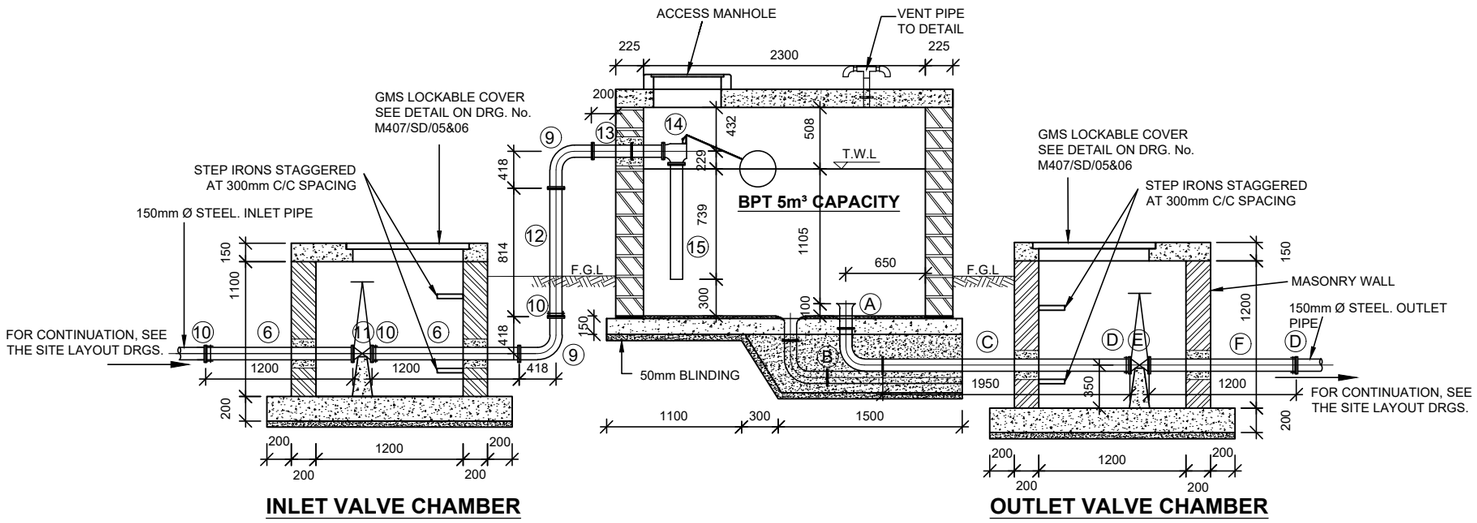

SECTION A-A
INLET & OUTLET PIPEWORK DETAILS

SCALE 1 : 50

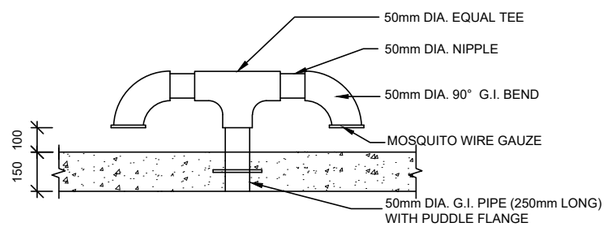

VENT PIPE DETAIL

N.T.S

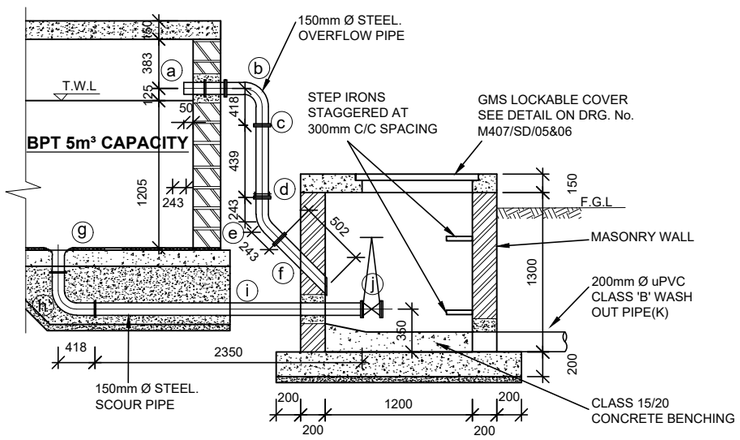

OVERFLOW & WASHOUT CHAMBER

SECTION B-B
OVERFLOW & WASHOUT PIPEWORK DETAILS

SCALE 1 : 50

BPT No. 1

OVERFLOW AND SCOUR PIPEWORK DETAILS
APPROVED LINED STEEL PIPES AND FITTINGS

OVERFLOW PIPE WORK

- (a) 150mm DIA. FLANGED SPIGOT PIPE 425mm LONG WITH A PUDDLE FLANGE AT 162.5mm FROM THE SPIGOT END.....1 Nr.
- (b) 150mm DIA. ALL FLANGED 90° BEND .....1 Nr.
- (c) 150mm DIA. FLANGED SPIGOT PIPE 439mm LONG (CUT TO SUIT ON SITE).....1 Nr.
- (d) 150mm DIA. FLANGE ADAPTOR .....1 Nr.
- (e) 150mm DIA. ALL FLANGED 45° BEND .....1 Nr.
- (f) 150mm DIA. FLANGED SPIGOT PIPE 502mm LONG WITH A SPIGOT END BEVELLED (CUT TO SUIT ON SITE).....1 Nr.

WASHOUT/SCOUR PIPE WORK

- (g) 150mm DIA. FLANGED BELLMOUTH .....1 Nr.
- (h) 150mm DIA. ALL FLANGED 90° BEND .....1 Nr.
- (i) 150mm DIA. DOUBLE FLANGED PIPE 2350mm LONG .....1 Nr.
- (j) 150mm DIA. ALL FLANGED GATE VALVE TO EURO 20 SERIES,TYPE 23 OR APPROVED EQUIVALENT.....1 Nr.
- (k) 200mm DIA. uPVC CLASS 'B' PIPE 10000mm LONG. .....1 Nr.

BPT No. 1

INLET PIPEWORK DETAILS
APPROVED LINED STEEL PIPES AND FITTINGS

- (1) 200mm DIA. STEPPED COUPLING.....1 Nr.
- (2) 200mm DIA. FLANGED SPIGOT PIPE 1250mm LONG .....1 Nr.
- (3) 200 x 200mm DIA. ALL FLANGED RADIAL TEE .....1 Nr.
- (4) 200mm DIA. BLANK FLANGE .....1 Nr.
- (5) 200 x 150mm DIA. ALL FLANGED CONCENTRIC TAPER.....1 Nr.
- (6) 150mm DIA. FLANGED SPIGOT PIPE 1200mm LONG .....4 Nr.
- (7) 150mm DIA. COUPLING .....2 Nr.
- (8) 150mm DIA. PLAIN ENDED PIPE 8m LONG(CUT TO SUIT ON SITE)...1 Nr.
- (9) 150mm DIA. ALL FLANGED 90° BEND .....3 Nr.
- (10) 150mm DIA. FLANGE ADAPTOR .....3 Nr.
- (11) 150mm DIA. ALL FLANGED GATE VALVE .....1 Nr.
- (12) 150mm DIA. FLANGED SPIGOT PIPE 814mm LONG (CUT TO SUIT ON SITE).....1 Nr.
- (13) 150mm DIA. DOUBLE FLANGED PIPE 575mm LONG WITH A PUDDLE FLANGE AT 262mm FROM ONE END.....1 Nr.
- (14) 150mm DIA. ALL FLANGED FLOAT VALVE TO SERIES 1042 BIWATER CATALOGUE OR APPROVED EQUIVALENT.....1 Nr.
- (15) 150mm DIA. FLANGED SPIGOT FERROUS PIPE 739mm LONG.....1 Nr.

BPT No. 1

OUTLET PIPEWORK DETAILS
APPROVED LINED STEEL PIPES AND FITTINGS

- (A) 150mm DIA. FLANGED BELLMOUTH .....1 Nr.
- (B) 150mm DIA. ALL FLANGED 90° BEND .....2 Nr.
- (C) 150mm DIA. FLANGED SPIGOT PIPE 1950mm LONG (CUT TO SUIT ON SITE).....1 Nr.
- (D) 150mm DIA. FLANGE ADAPTOR .....2 Nr.
- (E) 150mm DIA. ALL FLANGED GATE VALVE .....1 Nr.
- (F) 150mm DIA. FLANGED SPIGOT PIPE 1200mm LONG .....3 Nr.
- (G) 150mm DIA. COUPLING .....2 Nr.
- (H) 150mm DIA. PLAIN ENDED PIPE 8m LONG(CUT TO SUIT ON SITE)...1 Nr.
- (I) 200 x 150mm DIA. ALL FLANGED CONCENTRIC TAPER.....1 Nr.
- (J) 200mm DIA. BLANK FLANGE .....1 Nr.
- (K) 200 x 200mm DIA. ALL FLANGED RADIAL TEE .....1 Nr.
- (L) 200mm DIA. FLANGED SPIGOT PIPE 1250mm LONG .....1 Nr.
- (M) 200mm DIA. STEPPED COUPLING .....1 Nr.

NOTES

1. ALL PIPE, FITTINGS AND VALVE DIAMETER ARE NOMINAL DIAMETERS & OF CLASS NP 16
2. OTHER PIPES AND FITTINGS ARE SHOWN ON THE SITE LAYOUT PLANS ON DRG. NO. M407/CG/BPT-2/01
3. ALL DIMENSIONS ARE IN MM UNLESS OTHERWISE STATED
4. PIPE AND FITTINGS ARE MADE BY ASP (K) LTD.
5. VALVES ARE MADE BY ANHUI REDSTAR

ABBREVIATIONS

1. T.W.L - TOP WATER LEVEL
2. F.G.L - FINISHED GROUND LEVEL
3. G.I - GALVANISED IRON
4. R.C - REINFORCED CONCRETE
5. M.S - MILD STEEL
6. BPT - BREAK PRESSURE TANK
7. FE. - FERROUS

ISSUED FOR CONSTRUCTION

	REVISIONS		SIGN	DATE	APPROVED
		BY			
		CHECKED			
		BY			
		CHECKED			
		BY			
		CHECKED			
		BY			
		CHECKED			

CLIENT:
THE CHIEF EXECUTIVE OFFICER
TANA WATER WORKS DEVELOPMENT AGENCY
P.O BOX 1292 - 10100,
NYERI, KENYA

CONSULTING ENGINEERS:
MANGAT I.B PATEL(MIBP) LIMITED
P.O BOX 48674,00100-GPO,
NAIROBI, KENYA
E-MAIL: mibp.nairobi@mibp.co.ke
TEL: +254-2-2710500

PROJECT TITLE:
KENYA TOWNS SUSTAINABLE WATER SUPPLY AND SANITATION PROGRAM

CONTRACT No.TWSB/ADB/003/2019-2020
CONSTRUCTION OF CHUKA AND CHOGORIA WATER SUPPLY AND SANITATION PROJECT

LOT 1: CHUKA WATER SUPPLY

DRAWING TITLE:
BREAK PRESSURE TANK ON KATHWANA LINE
(CAPACITY 5m³)
PIPEWORK DETAILS

Designed by:	P.W.K	Drawn by:	P.W.K
Checked by:	N.J.N	Approved by:	N.J.N
Scale:	1:50	Date:	FEB 2025

DRG No. M407/CK/BPT-1/03 REV

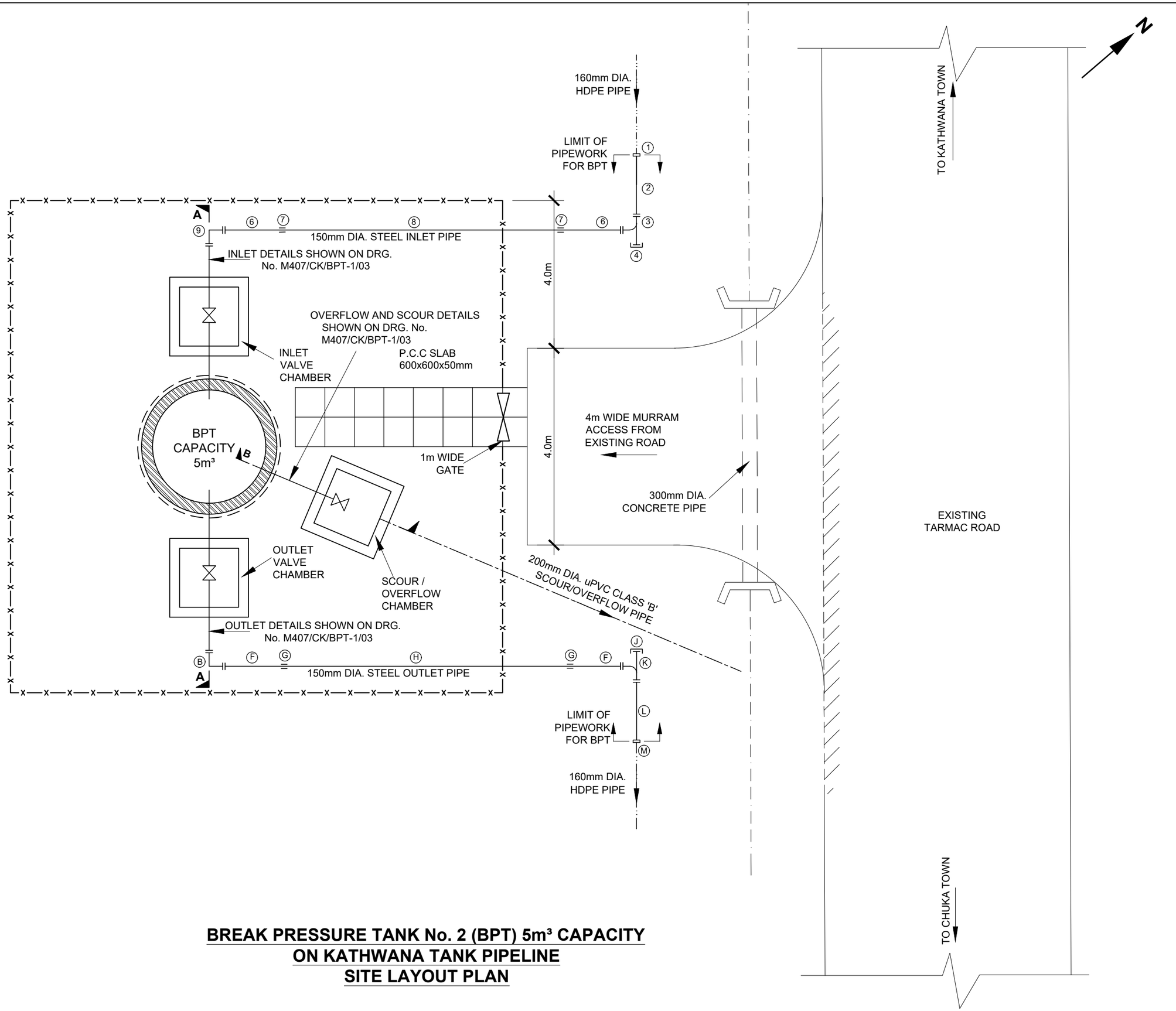

BREAK PRESSURE TANK No. 2 (BPT) 5m³ CAPACITY ON KATHWANA TANK PIPELINE SITE LAYOUT PLAN

NOTES

1. DIMENSIONS IN METERS UNLESS OTHERWISE SPECIFIED
2. ALL PIPE DIAMETERS INDICATED ARE NOMINAL SIZES.
3. THIS DRAWING TO BE READ IN CONJUCTION WITH DRG. NO. M407/CK/BPT-2/02&03
4. FOR BREAK PRESSURE TANK DETAILS SEE DRG NO. M407/CK/BPT-2/02
5. FOR DETAILS OF INLET, OUTLET & SCOUR/OVERFLOW PIPEWORK, SEE DRG. NO. M407/CK/BPT-2/02&03

LEGEND

- CHAINLINK FENCE
- GRAVITY MAIN
- SCOUR / OVERFLOW PIPE
- EARTH DRAIN
- GATE VALVE
- CHAMBER
- CULVERT WITH HEAD WALLS

ISSUED FOR CONSTRUCTION

REVISIONS		SIGN	DATE	APPROVED
	BY			
	CHECGED			
	BY			
	CHECGED			
	BY			
	CHECGED			
	BY			
	CHECGED			

CLIENT:
THE CHIEF EXECUTIVE OFFICER
TANA WATER WORKS DEVELOPMENT AGENCY
P.O BOX 1292 - 10100,
NYERI, KENYA

CONSULTING ENGINEERS:
MANGAT I.B PATEL(MIBP) LIMITED
P.O BOX 48674,00100-GPO,
NAIROBI, KENYA
E-MAIL: mibp.nairobi@mibp.co.ke
TEL: +254-2-2710500

PROJECT TITLE:
KENYA TOWNS SUSTAINABLE WATER SUPPLY AND SANITATION PROGRAM

TENDER No.TWSB/ADB/003/2019-2020
CONSTRUCTION OF CHUKA AND CHOGORIA WATER SUPPLY AND SANITATION PROJECT

LOT 1: CHUKA WATER SUPPLY

DRAWING TITLE:
BREAK PRESSURE TANK ON KATHWANA PIPELINE (CAPACITY 5m³) PLAN, SECTION & R.C. DETAILS

Designed by:	P.W.K	Drawn by:	P.W.K
Checked by:	N.J.N	Approved by:	N.J.N
Scale:	1:75	Date:	FEB 2025

DRG No. M407/CK/BPT-2/01 REV

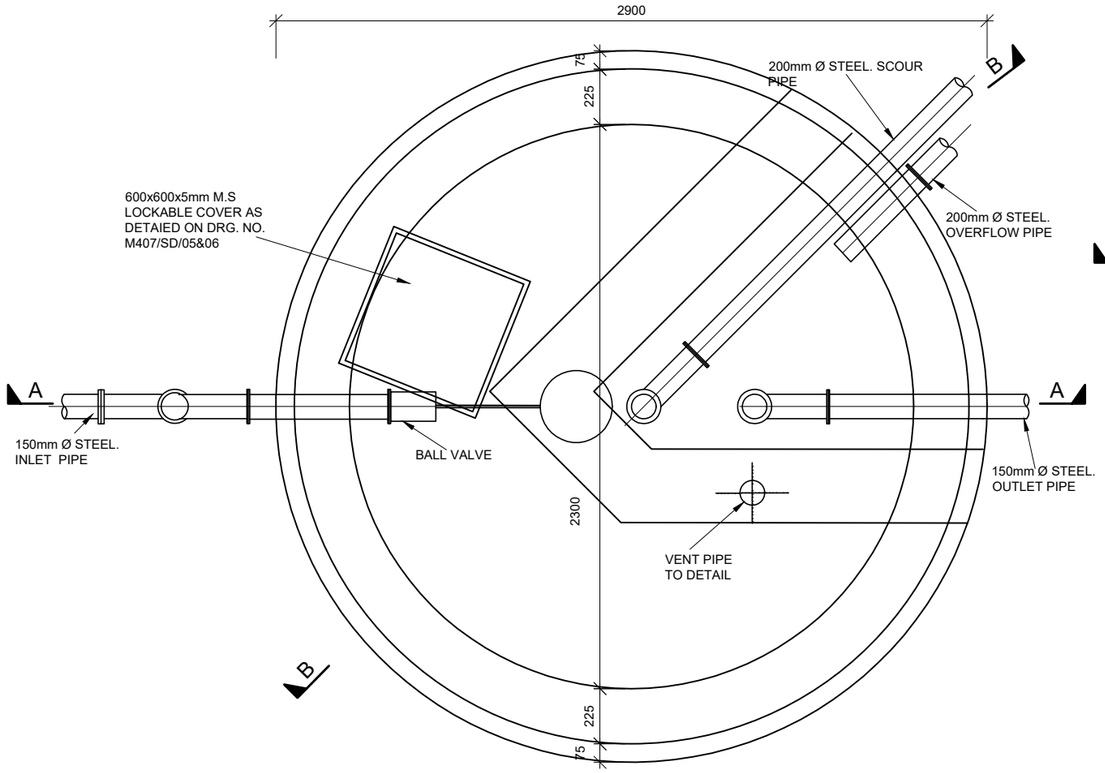

PLAN

SCALE 1 : 25

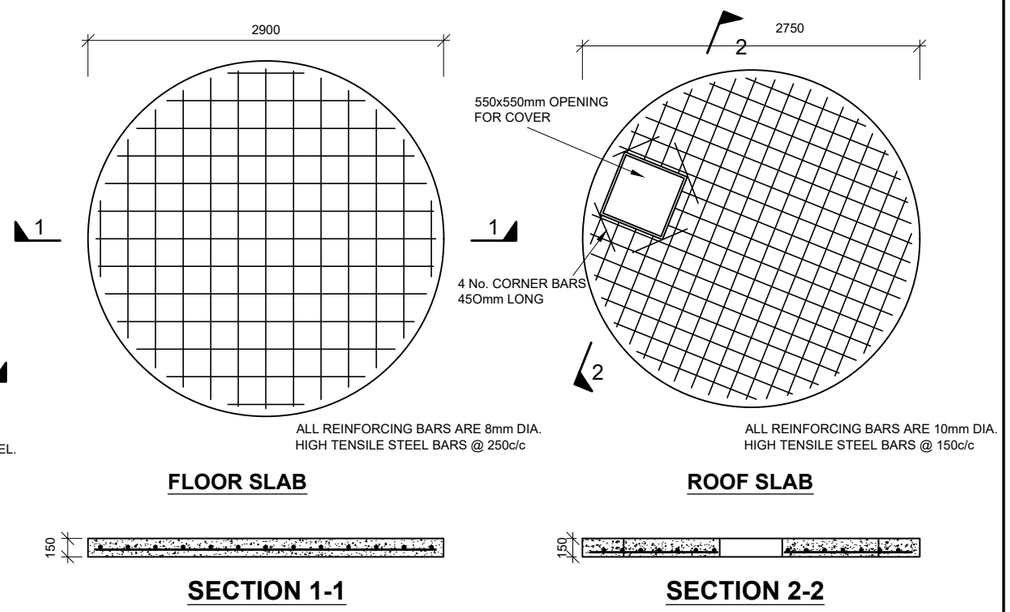

REINFORCEMENT DETAILS

SCALE 1 : 50

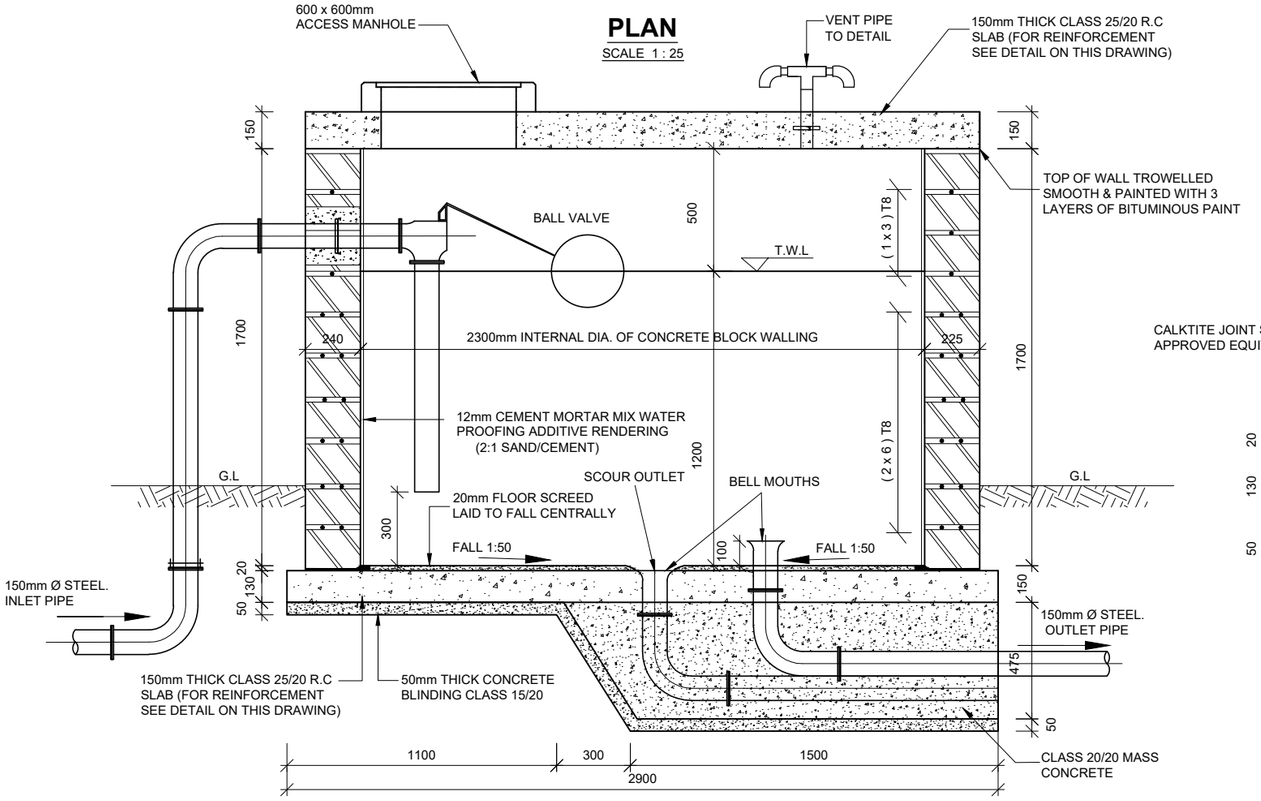

SECTION A-A

SCALE 1 : 25

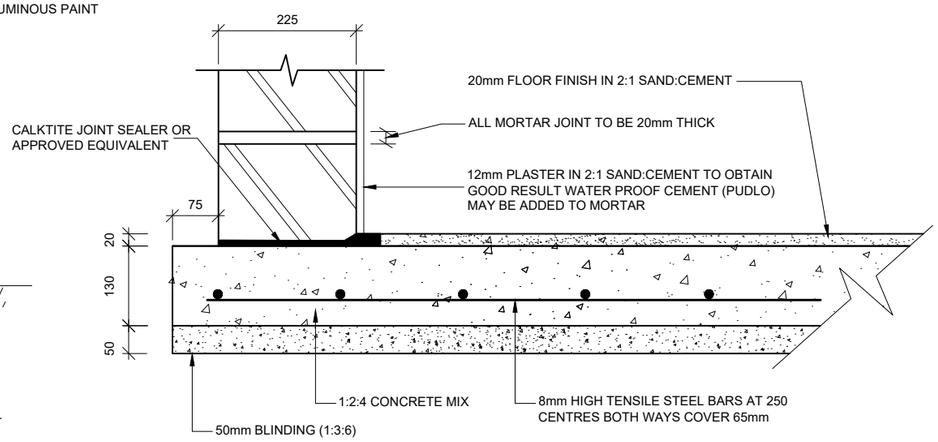

ENLARGED DETAIL AT FOOT OF WALL

SCALE 1 : 10

NOTES

1. FOR DETAILS OF SITE LAYOUT OF THE BREAK PRESSURE TANKS, REFER TO DRG. Nos. M407/CK/BPT-2/01
2. FOR DETAILS OF ALL PIPE CONNECTIONS AND FITTINGS, REFER DRG. No.M407/CK/BPT-2/03
3. ALL DIMENSIONS IN mm UNLESS SPECIFIED.

ABBREVIATIONS

1. T.W.L - TOP WATER LEVEL
2. G.L - GROUND LEVEL
3. R.C - REINFORCED CONCRETE
4. FE. - FERROUS

ISSUED FOR CONSTRUCTION

REVISIONS		SIGN	DATE	APPROVED
	BY			
	CHECKED			
	BY			
	CHECKED			
	BY			
	CHECKED			
	BY			
	CHECKED			

CLIENT:
THE CHIEF EXECUTIVE OFFICER
TANA WATER WORKS DEVELOPMENT AGENCY
P.O BOX 1292 - 10100,
NYERI, KENYA

CONSULTING ENGINEERS:
MANGAT I.B PATEL(MIBP) LIMITED
P.O BOX 48674,00100-GPO,
NAIROBI, KENYA
E-MAIL: mibp.nairobi@mibp.co.ke
TEL: +254-2-2710500

PROJECT TITLE:
KENYA TOWNS SUSTAINABLE WATER SUPPLY AND SANITATION PROGRAM

CONTRACT No.TWSB/ADB/003/2019-2020
CONSTRUCTION OF CHUKA AND CHOGORIA WATER SUPPLY AND SANITATION PROJECT

LOT 1: CHUKA WATER SUPPLY

DRAWING TITLE:
BREAK PRESSURE TANK ON KATHWANA LINE (CAPACITY 5m³) PLAN, SECTION & R.C. DETAILS

Designed by:	P.W.K	Drawn by:	P.W.K
Checked by:	N.J.N	Approved by:	N.J.N
Scale:	1:25	Date:	FEB 2025

DRG No. M407/CK/BPT-2/02 REV

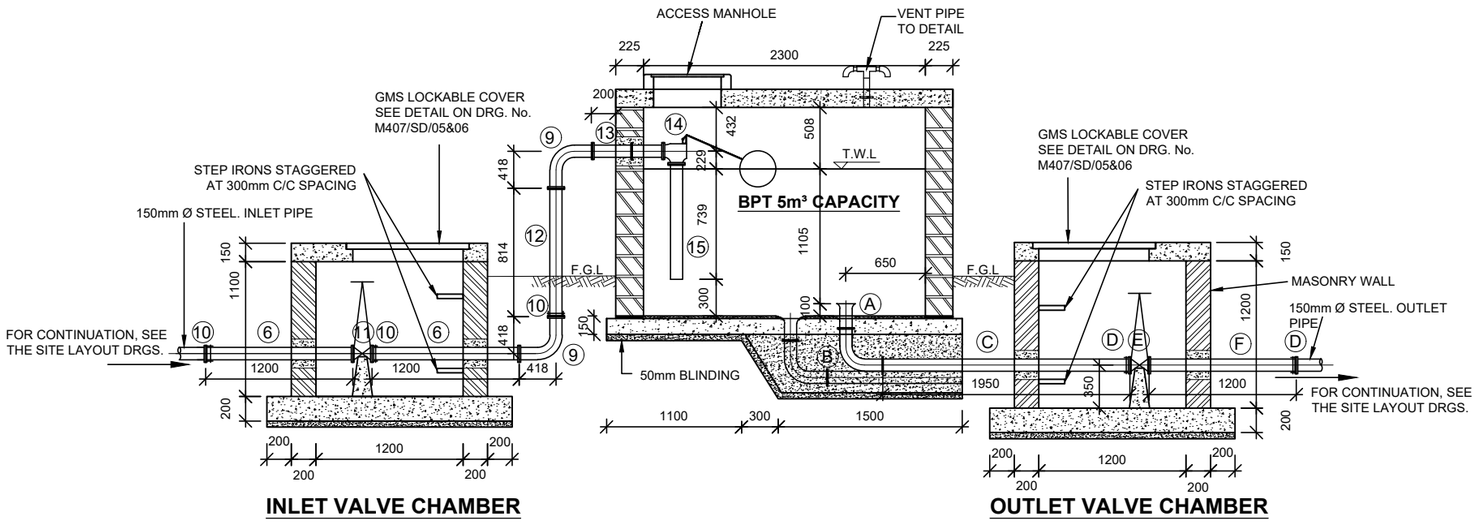

SECTION A-A
INLET & OUTLET PIPEWORK DETAILS

SCALE 1 : 50

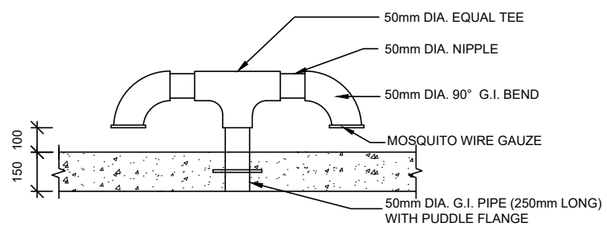

VENT PIPE DETAIL

N.T.S

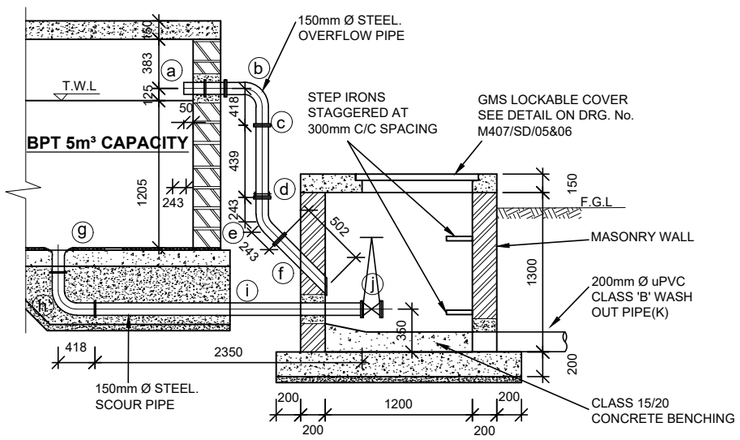

OVERFLOW & WASHOUT CHAMBER

SECTION B-B
OVERFLOW & WASHOUT PIPEWORK DETAILS

SCALE 1 : 50

BPT No. 1

OVERFLOW AND SCOUR PIPEWORK DETAILS
APPROVED LINED STEEL PIPES AND FITTINGS

OVERFLOW PIPE WORK

- (a) 150mm DIA. FLANGED SPIGOT PIPE 425mm LONG WITH A PUDDLE FLANGE AT 162.5mm FROM THE SPIGOT END.....1 Nr.
- (b) 150mm DIA. ALL FLANGED 90° BEND .....1 Nr.
- (c) 150mm DIA. FLANGED SPIGOT PIPE 439mm LONG (CUT TO SUIT ON SITE).....1 Nr.
- (d) 150mm DIA. FLANGE ADAPTOR .....1 Nr.
- (e) 150mm DIA. ALL FLANGED 45° BEND .....1 Nr.
- (f) 150mm DIA. FLANGED SPIGOT PIPE 502mm LONG WITH A SPIGOT END BEVELLED (CUT TO SUIT ON SITE).....1 Nr.

WASHOUT/SCOUR PIPE WORK

- (g) 150mm DIA. FLANGED BELLMOUTH .....1 Nr.
- (h) 150mm DIA. ALL FLANGED 90° BEND .....1 Nr.
- (i) 150mm DIA. DOUBLE FLANGED PIPE 2350mm LONG .....1 Nr.
- (j) 150mm DIA. ALL FLANGED GATE VALVE TO EURO 20 SERIES,TYPE 23 OR APPROVED EQUIVALENT.....1 Nr.
- (k) 200mm DIA. uPVC CLASS 'B' PIPE 10000mm LONG. .....1 Nr.

BPT No. 1

INLET PIPEWORK DETAILS
APPROVED LINED STEEL PIPES AND FITTINGS

- (1) 160mm DIA. STEPPED COUPLING.....1 Nr.
- (2) 150mm DIA. FLANGED SPIGOT PIPE 1250mm LONG .....1 Nr.
- (3) 150 x 150mm DIA. ALL FLANGED RADIAL TEE .....1 Nr.
- (4) 150mm DIA. BLANK FLANGE .....1 Nr.
- (6) 150mm DIA. FLANGED SPIGOT PIPE 1200mm LONG .....4 Nr.
- (7) 150mm DIA. COUPLING .....2 Nr.
- (8) 150mm DIA. PLAIN ENDED PIPE 8m LONG(CUT TO SUIT ON SITE)...1 Nr.
- (9) 150mm DIA. ALL FLANGED 90° BEND .....3 Nr.
- (10) 150mm DIA. FLANGE ADAPTOR .....3 Nr.
- (11) 150mm DIA. ALL FLANGED GATE VALVE .....1 Nr.
- (12) 150mm DIA. FLANGED SPIGOT PIPE 814mm LONG (CUT TO SUIT ON SITE).....1 Nr.
- (13) 150mm DIA. DOUBLE FLANGED PIPE 575mm LONG WITH A PUDDLE FLANGE AT 262mm FROM ONE END.....1 Nr.
- (14) 150mm DIA. ALL FLANGED FLOAT VALVE TO SERIES 1042 BIWATER CATALOGUE OR APPROVED EQUIVALENT.....1 Nr.
- (15) 150mm DIA. FLANGED SPIGOT FERROUS PIPE 739mm LONG.....1 Nr.

BPT No. 1

OUTLET PIPEWORK DETAILS
APPROVED LINED STEEL PIPES AND FITTINGS

- (A) 150mm DIA. FLANGED BELLMOUTH .....1 Nr.
- (B) 150mm DIA. ALL FLANGED 90° BEND .....2 Nr.
- (C) 150mm DIA. FLANGED SPIGOT PIPE 1950mm LONG (CUT TO SUIT ON SITE).....1 Nr.
- (D) 150mm DIA. FLANGE ADAPTOR .....2 Nr.
- (E) 150mm DIA. ALL FLANGED GATE VALVE .....1 Nr.
- (F) 150mm DIA. FLANGED SPIGOT PIPE 1200mm LONG .....3 Nr.
- (G) 150mm DIA. COUPLING .....2 Nr.
- (H) 150mm DIA. PLAIN ENDED PIPE 8m LONG(CUT TO SUIT ON SITE)...1 Nr.
- (J) 150mm DIA. BLANK FLANGE .....1 Nr.
- (K) 150 x 150mm DIA. ALL FLANGED RADIAL TEE .....1 Nr.
- (L) 150mm DIA. FLANGED SPIGOT PIPE 1250mm LONG .....1 Nr.
- (M) 150mm DIA. STEPPED COUPLING .....1 Nr.

NOTES

1. ALL PIPE, FITTINGS AND VALVE DIAMETER ARE NOMINAL DIAMETERS & OF CLASS NP 16
2. OTHER PIPES AND FITTINGS ARE SHOWN ON THE SITE LAYOUT PLANS ON DRG. NO. M407/CK/BPT-2/01
3. ALL DIMENSIONS ARE IN MM UNLESS OTHERWISE STATED
4. PIPE AND FITTINGS ARE MADE BY ASP (K) LTD.
5. VALVES ARE MADE BY ANHUI REDSTAR

ABBREVIATIONS

1. T.W.L - TOP WATER LEVEL
2. F.G.L - FINISHED GROUND LEVEL
3. G.I - GALVANISED IRON
4. R.C - REINFORCED CONCRETE
5. M.S - MILD STEEL
6. BPT - BREAK PRESSURE TANK
7. FE. - FERROUS

ISSUED FOR CONSTRUCTION

	REVISIONS		SIGN	DATE	APPROVED
		BY			
		CHECKED			
		BY			
		CHECKED			
		BY			
		CHECKED			
		BY			
		CHECKED			

CLIENT:
THE CHIEF EXECUTIVE OFFICER
TANA WATER WORKS DEVELOPMENT AGENCY
P.O BOX 1292 - 10100,
NYERI, KENYA

CONSULTING ENGINEERS:
MANGAT I.B PATEL(MIBP) LIMITED
P.O BOX 48674,00100-GPO,
NAIROBI, KENYA
E-MAIL: mibp.nairobi@mibp.co.ke
TEL: +254-2-2710500

PROJECT TITLE:
KENYA TOWNS SUSTAINABLE WATER SUPPLY AND SANITATION PROGRAM

CONTRACT No.TWSB/ADB/003/2019-2020
CONSTRUCTION OF CHUKA AND CHOGORIA WATER SUPPLY AND SANITATION PROJECT

LOT 1: CHUKA WATER SUPPLY

DRAWING TITLE:
BREAK PRESSURE TANK ON KATHWANA LINE (CAPACITY 5m³) PIPEWORK DETAILS

Designed by:	P.W.K	Drawn by:	P.W.K
Checked by:	N.J.N	Approved by:	N.J.N
Scale:	1:50	Date:	FEB 2025

DRG No.M407/CK/BPT-2/03 REV

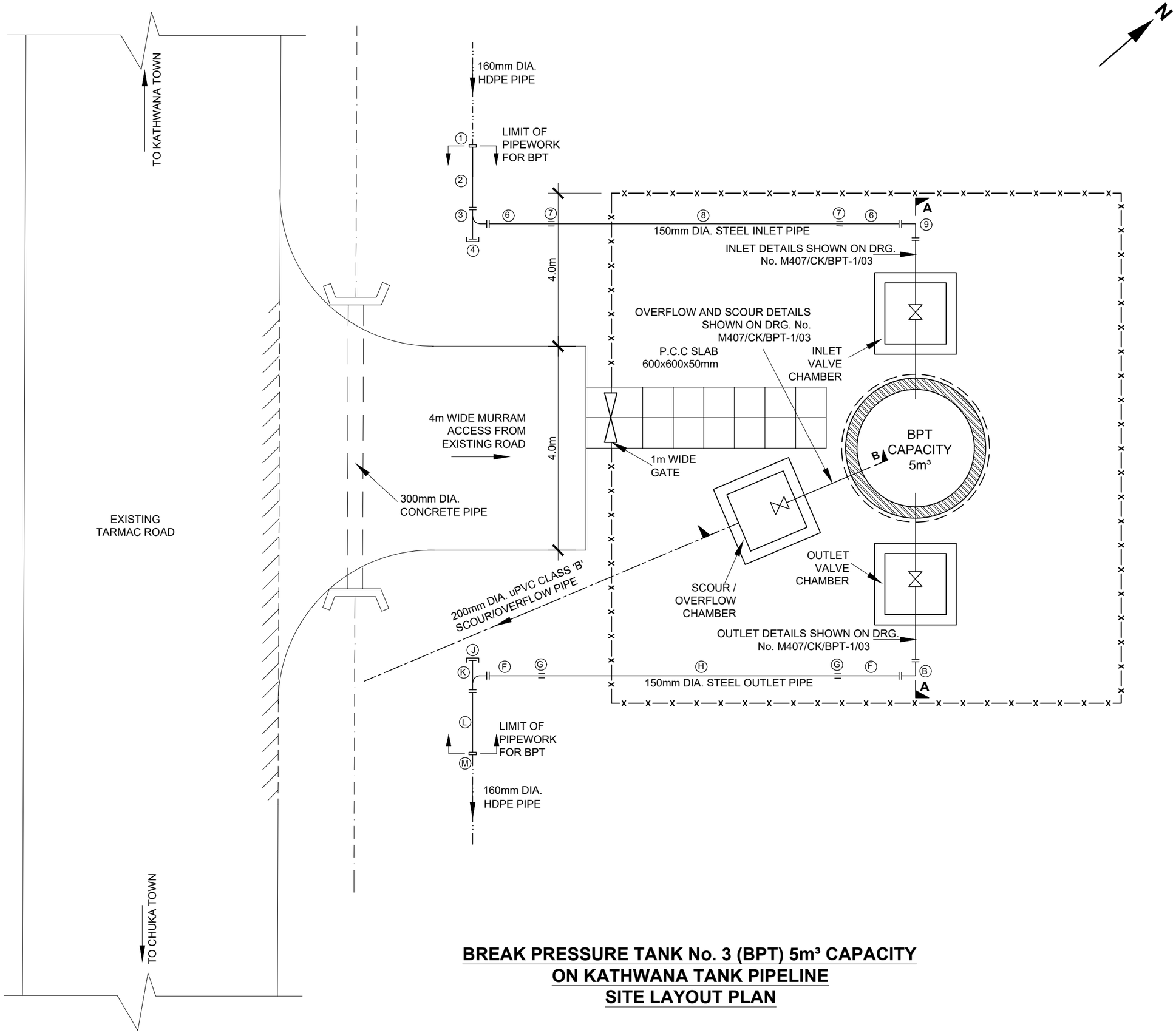

BREAK PRESSURE TANK No. 3 (BPT) 5m³ CAPACITY ON KATHWANA TANK PIPELINE SITE LAYOUT PLAN

NOTES

1. DIMENSIONS IN METERS UNLESS OTHERWISE SPECIFIED
2. ALL PIPE DIAMETERS INDICATED ARE NOMINAL SIZES.
3. THIS DRAWING TO BE READ IN CONJUCTION WITH DRG. NO. M407/CK/BPT-3/02&03
4. FOR BREAK PRESSURE TANK DETAILS SEE DRG NO. M407/CK/BPT-3/02
5. FOR DETAILS OF INLET, OUTLET & SCOUR/OVERFLOW PIPEWORK, SEE DRG. NO. M407/CK/BPT-3/02&03

LEGEND

- CHAINLINK FENCE
- GRAVITY MAIN
- SCOUR / OVERFLOW PIPE
- EARTH DRAIN
- GATE VALVE
- CHAMBER
- CULVERT WITH HEAD WALLS

ISSUED FOR CONSTRUCTION

REVISIONS		SIGN	DATE	APPROVED
	BY			
	CHECGED			
	BY			
	CHECGED			
	BY			
	CHECGED			
	BY			
	CHECGED			

CLIENT:

THE CHIEF EXECUTIVE OFFICER
TANA WATER WORKS DEVELOPMENT AGENCY
P.O BOX 1292 - 10100,
NYERI, KENYA

CONSULTING ENGINEERS:

MANGAT I.B PATEL(MIBP) LIMITED
P.O BOX 48674,00100-GPO,
NAIROBI, KENYA
E-MAIL: mibp.nairobi@mibp.co.ke
TEL: +254-2-2710500

PROJECT TITLE:

KENYA TOWNS SUSTAINABLE WATER SUPPLY AND SANITATION PROGRAM

TENDER No.TWSB/ADB/003/2019-2020

CONSTRUCTION OF CHUKA AND CHOGORIA WATER SUPPLY AND SANITATION PROJECT

LOT 1: CHUKA WATER SUPPLY

DRAWING TITLE:

BREAK PRESSURE TANK ON KATHWANA PIPELINE (CAPACITY 5m³) PLAN, SECTION & R.C. DETAILS

Designed by:	P.W.K	Drawn by:	P.W.K
Checked by:	N.J.N	Approved by:	N.J.N
Scale:	1:75	Date:	FEB 2025

DRG No. M407/CK/BPT-3/01 REV

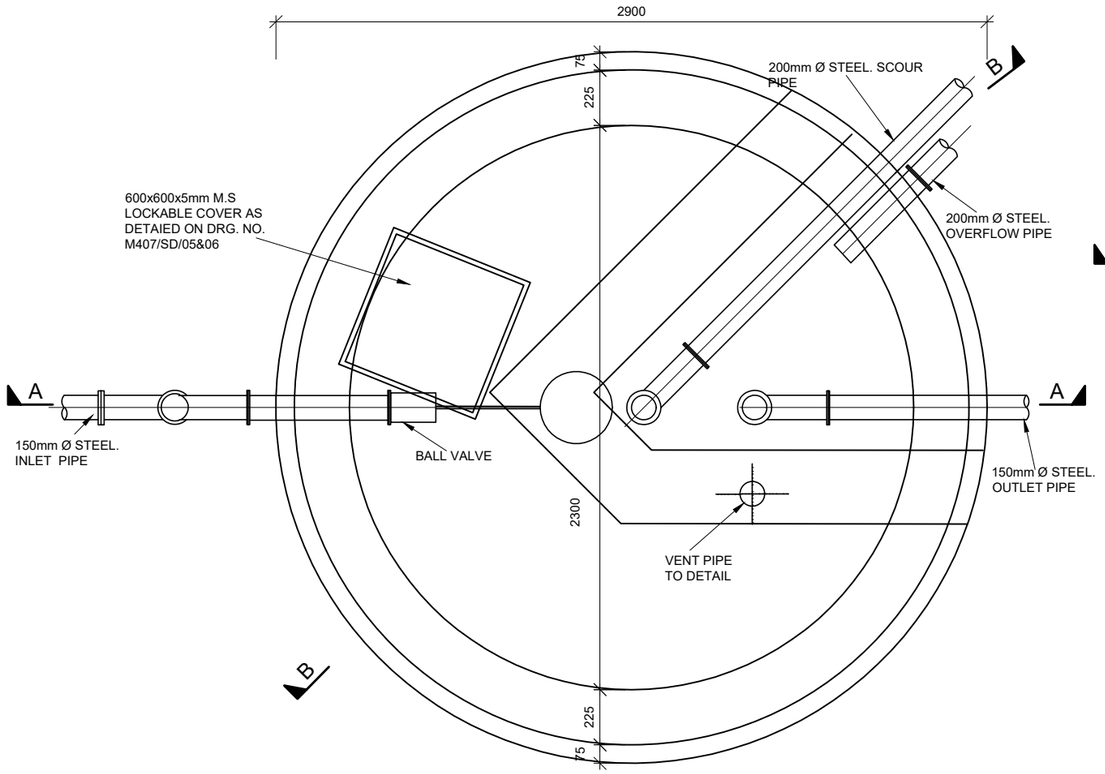

PLAN

SCALE 1 : 25

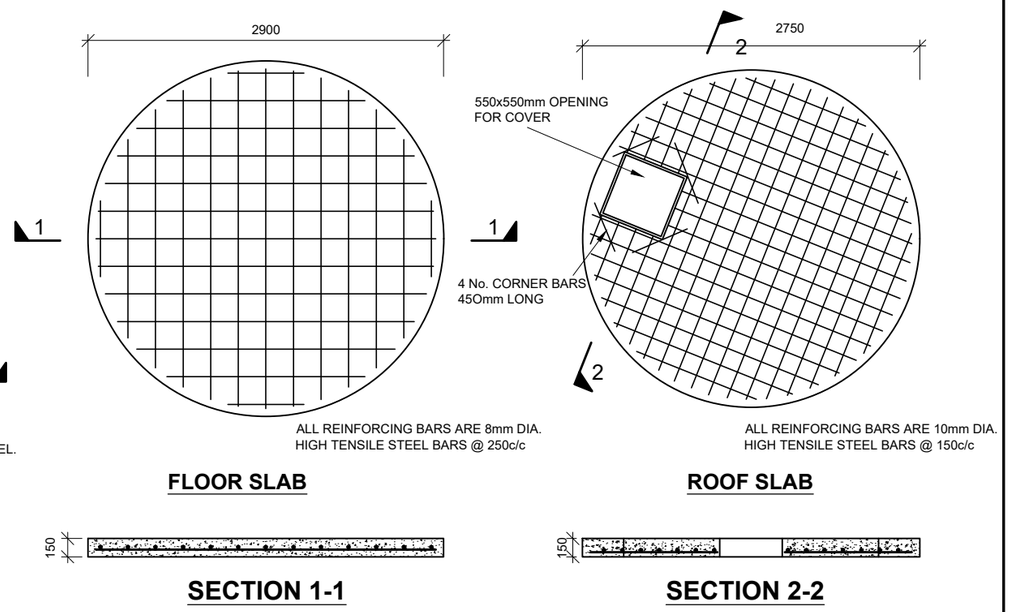

REINFORCEMENT DETAILS

SCALE 1 : 50

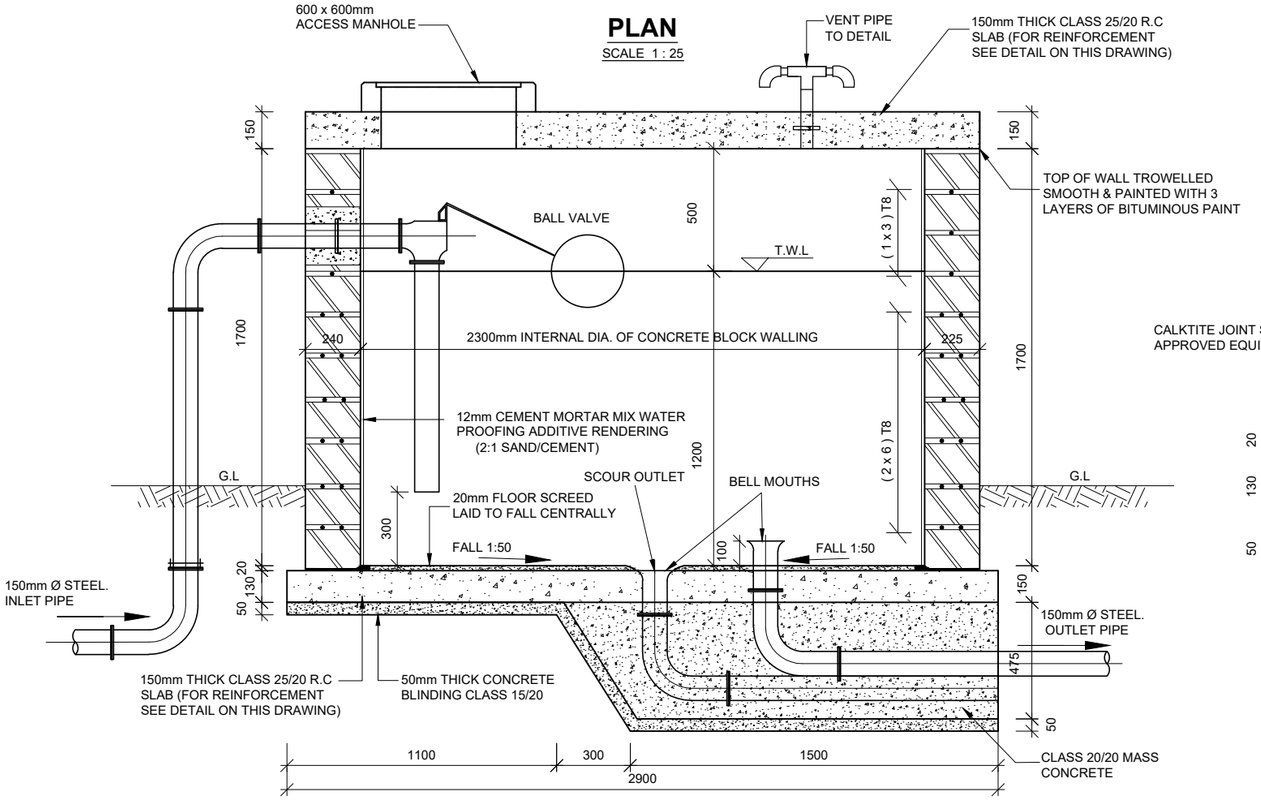

SECTION A-A

SCALE 1 : 25

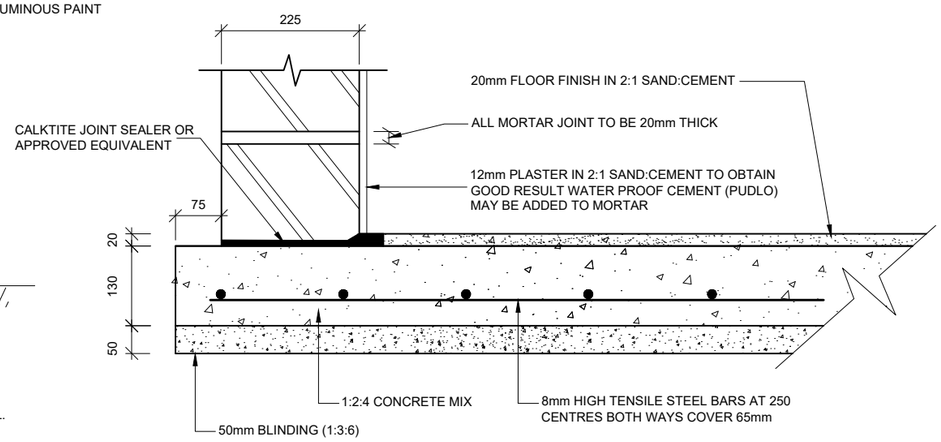

ENLARGED DETAIL AT FOOT OF WALL

SCALE 1 : 10

NOTES

1. FOR DETAILS OF SITE LAYOUT OF THE BREAK PRESSURE TANKS, REFER TO DRG. Nos. M407/CK/BPT-3/01
2. FOR DETAILS OF ALL PIPE CONNECTIONS AND FITTINGS, REFER DRG. No.M407/CK/BPT-3/03
3. ALL DIMENSIONS IN mm UNLESS SPECIFIED.

ABBREVIATIONS

1. T.W.L - TOP WATER LEVEL
2. G.L - GROUND LEVEL
3. R.C - REINFORCED CONCRETE
4. FE. - FERROUS

ISSUED FOR CONSTRUCTION

REVISIONS		SIGN	DATE	APPROVED
	BY			
	CHECKED			
	BY			
	CHECKED			
	BY			
	CHECKED			
	BY			
	CHECKED			

CLIENT:
THE CHIEF EXECUTIVE OFFICER
TANA WATER WORKS DEVELOPMENT AGENCY
P.O BOX 1292 - 10100,
NYERI, KENYA

CONSULTING ENGINEERS:
MANGAT I.B PATEL(MIBP) LIMITED
P.O BOX 48674,00100-GPO,
NAIROBI, KENYA
E-MAIL: mibp.nairobi@mibp.co.ke
TEL: +254-2-2710500

PROJECT TITLE:
KENYA TOWNS SUSTAINABLE WATER SUPPLY AND SANITATION PROGRAM

CONTRACT No.TWSB/ADB/003/2019-2020
CONSTRUCTION OF CHUKA AND CHOGORIA WATER SUPPLY AND SANITATION PROJECT

LOT 1: CHUKA WATER SUPPLY

DRAWING TITLE:
BREAK PRESSURE TANK ON KATHWANA LINE (CAPACITY 5m³) PLAN, SECTION & R.C. DETAILS

Designed by:	P.W.K	Drawn by:	P.W.K
Checked by:	N.J.N	Approved by:	N.J.N
Scale:	1:25	Date:	FEB 2025

DRG No. M407/CK/BPT-3/02 REV

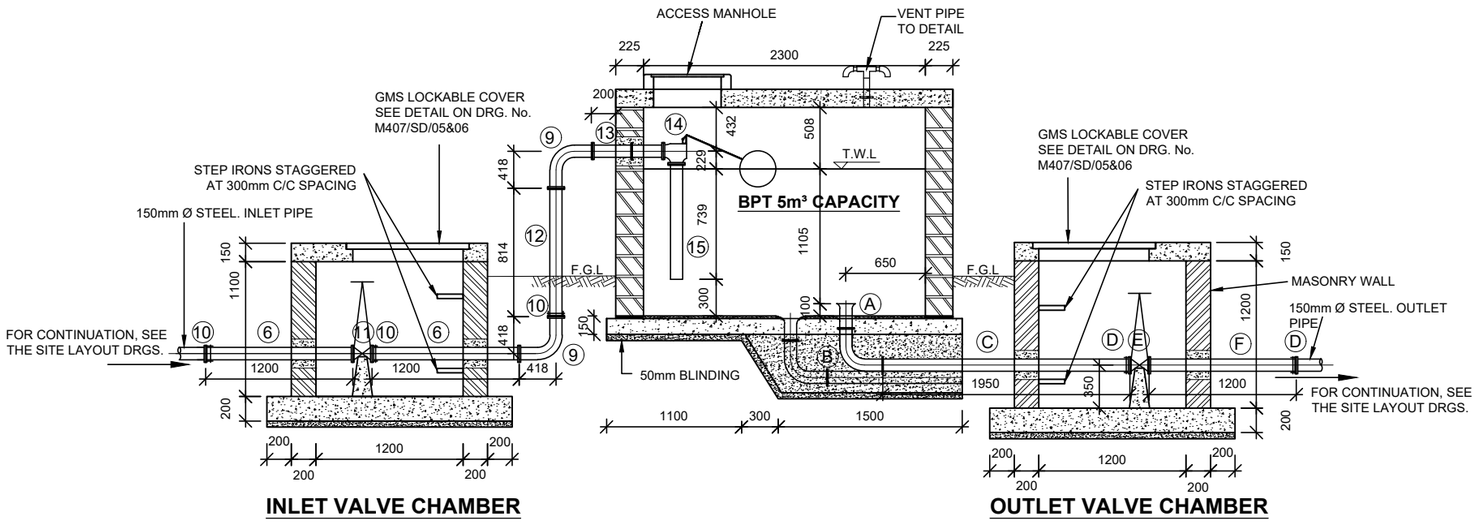

SECTION A-A
INLET & OUTLET PIPEWORK DETAILS

SCALE 1 : 50

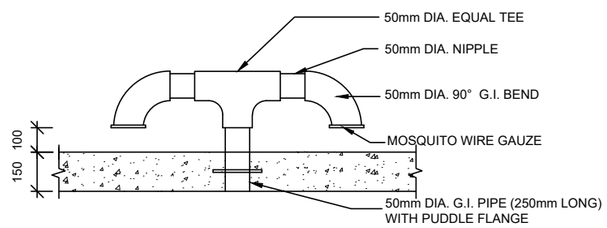

VENT PIPE DETAIL

N.T.S

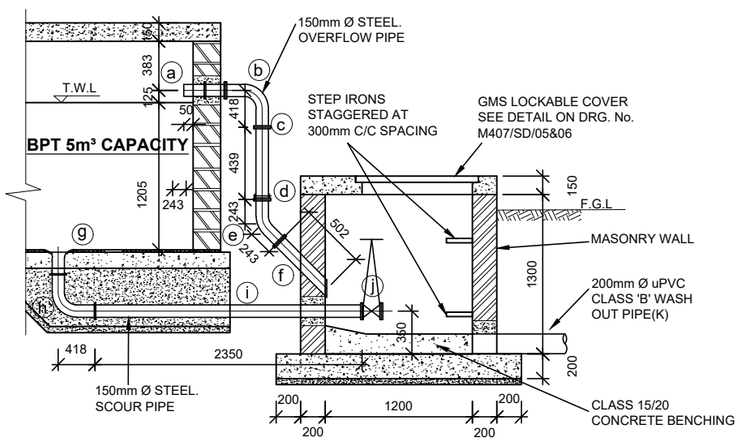

OVERFLOW & WASHOUT CHAMBER

SECTION B-B
OVERFLOW & WASHOUT PIPEWORK DETAILS

SCALE 1 : 50

BPT No. 1

OVERFLOW AND SCOUR PIPEWORK DETAILS
APPROVED LINED STEEL PIPES AND FITTINGS

OVERFLOW PIPE WORK

- (a) 150mm DIA. FLANGED SPIGOT PIPE 425mm LONG WITH A PUDDLE FLANGE AT 162.5mm FROM THE SPIGOT END.....1 Nr.
- (b) 150mm DIA. ALL FLANGED 90° BEND .....1 Nr.
- (c) 150mm DIA. FLANGED SPIGOT PIPE 439mm LONG (CUT TO SUIT ON SITE).....1 Nr.
- (d) 150mm DIA. FLANGE ADAPTOR .....1 Nr.
- (e) 150mm DIA. ALL FLANGED 45° BEND .....1 Nr.
- (f) 150mm DIA. FLANGED SPIGOT PIPE 502mm LONG WITH A SPIGOT END BEVELLED (CUT TO SUIT ON SITE).....1 Nr.

WASHOUT/SCOUR PIPE WORK

- (g) 150mm DIA. FLANGED BELLMOUTH .....1 Nr.
- (h) 150mm DIA. ALL FLANGED 90° BEND .....1 Nr.
- (i) 150mm DIA. DOUBLE FLANGED PIPE 2350mm LONG .....1 Nr.
- (j) 150mm DIA. ALL FLANGED GATE VALVE TO EURO 20 SERIES,TYPE 23 OR APPROVED EQUIVALENT.....1 Nr.
- (k) 200mm DIA. uPVC CLASS 'B' PIPE 10000mm LONG. .....1 Nr.

BPT No. 1

INLET PIPEWORK DETAILS
APPROVED LINED STEEL PIPES AND FITTINGS

- (1) 160mm DIA. STEPPED COUPLING.....1 Nr.
- (2) 150mm DIA. FLANGED SPIGOT PIPE 1250mm LONG .....1 Nr.
- (3) 150 x 150mm DIA. ALL FLANGED RADIAL TEE .....1 Nr.
- (4) 150mm DIA. BLANK FLANGE .....1 Nr.
- (6) 150mm DIA. FLANGED SPIGOT PIPE 1200mm LONG .....4 Nr.
- (7) 150mm DIA. COUPLING .....2 Nr.
- (8) 150mm DIA. PLAIN ENDED PIPE 8m LONG(CUT TO SUIT ON SITE)...1 Nr.
- (9) 150mm DIA. ALL FLANGED 90° BEND .....3 Nr.
- (10) 150mm DIA. FLANGE ADAPTOR .....3 Nr.
- (11) 150mm DIA. ALL FLANGED GATE VALVE .....1 Nr.
- (12) 150mm DIA. FLANGED SPIGOT PIPE 814mm LONG (CUT TO SUIT ON SITE).....1 Nr.
- (13) 150mm DIA. DOUBLE FLANGED PIPE 575mm LONG WITH A PUDDLE FLANGE AT 262mm FROM ONE END.....1 Nr.
- (14) 150mm DIA. ALL FLANGED FLOAT VALVE TO SERIES 1042 BIWATER CATALOGUE OR APPROVED EQUIVALENT.....1 Nr.
- (15) 150mm DIA. FLANGED SPIGOT FERROUS PIPE 739mm LONG.....1 Nr.

BPT No. 1

OUTLET PIPEWORK DETAILS
APPROVED LINED STEEL PIPES AND FITTINGS

- (A) 150mm DIA. FLANGED BELLMOUTH .....1 Nr.
- (B) 150mm DIA. ALL FLANGED 90° BEND .....2 Nr.
- (C) 150mm DIA. FLANGED SPIGOT PIPE 1950mm LONG (CUT TO SUIT ON SITE).....1 Nr.
- (D) 150mm DIA. FLANGE ADAPTOR .....2 Nr.
- (E) 150mm DIA. ALL FLANGED GATE VALVE .....1 Nr.
- (F) 150mm DIA. FLANGED SPIGOT PIPE 1200mm LONG .....3 Nr.
- (G) 150mm DIA. COUPLING .....2 Nr.
- (H) 150mm DIA. PLAIN ENDED PIPE 8m LONG(CUT TO SUIT ON SITE)...1 Nr.
- (J) 150mm DIA. BLANK FLANGE .....1 Nr.
- (K) 150 x 150mm DIA. ALL FLANGED RADIAL TEE .....1 Nr.
- (L) 150mm DIA. FLANGED SPIGOT PIPE 1250mm LONG .....1 Nr.
- (M) 150mm DIA. STEPPED COUPLING .....1 Nr.

NOTES

1. ALL PIPE, FITTINGS AND VALVE DIAMETER ARE NOMINAL DIAMETERS & OF CLASS NP 16
2. OTHER PIPES AND FITTINGS ARE SHOWN ON THE SITE LAYOUT PLANS ON DRG. NO. M407/CK/BPT-3/01
3. ALL DIMENSIONS ARE IN MM UNLESS OTHERWISE STATED
4. PIPE AND FITTINGS ARE MADE BY ASP (K) LTD.
5. VALVES ARE MADE BY ANHUI REDSTAR

ABBREVIATIONS

1. T.W.L - TOP WATER LEVEL
2. F.G.L - FINISHED GROUND LEVEL
3. G.I - GALVANISED IRON
4. R.C - REINFORCED CONCRETE
5. M.S - MILD STEEL
6. BPT - BREAK PRESSURE TANK
7. FE. - FERROUS

ISSUED FOR CONSTRUCTION

REVISIONS		SIGN	DATE	APPROVED
	BY			
	CHECKED			
	BY			
	CHECKED			
	BY			
	CHECKED			
	BY			
	CHECKED			

CLIENT:
THE CHIEF EXECUTIVE OFFICER
TANA WATER WORKS DEVELOPMENT AGENCY
P.O BOX 1292 - 10100,
NYERI, KENYA

CONSULTING ENGINEERS:
MANGAT I.B PATEL(MIBP) LIMITED
P.O BOX 48674,00100-GPO,
NAIROBI, KENYA
E-MAIL: mibp.nairobi@mibp.co.ke
TEL: +254-2-2710500

PROJECT TITLE:
KENYA TOWNS SUSTAINABLE WATER SUPPLY AND SANITATION PROGRAM

CONTRACT No.TWSB/ADB/003/2019-2020
CONSTRUCTION OF CHUKA AND CHOGORIA WATER SUPPLY AND SANITATION PROJECT

LOT 1: CHUKA WATER SUPPLY

DRAWING TITLE:
BREAK PRESSURE TANK ON KATHWANA LINE (CAPACITY 5m³) PIPEWORK DETAILS

Designed by:	P.W.K	Drawn by:	P.W.K
Checked by:	N.J.N	Approved by:	N.J.N
Scale:	1:50	Date:	FEB 2025

DRG No. M407/CK/BPT-3/03 REV

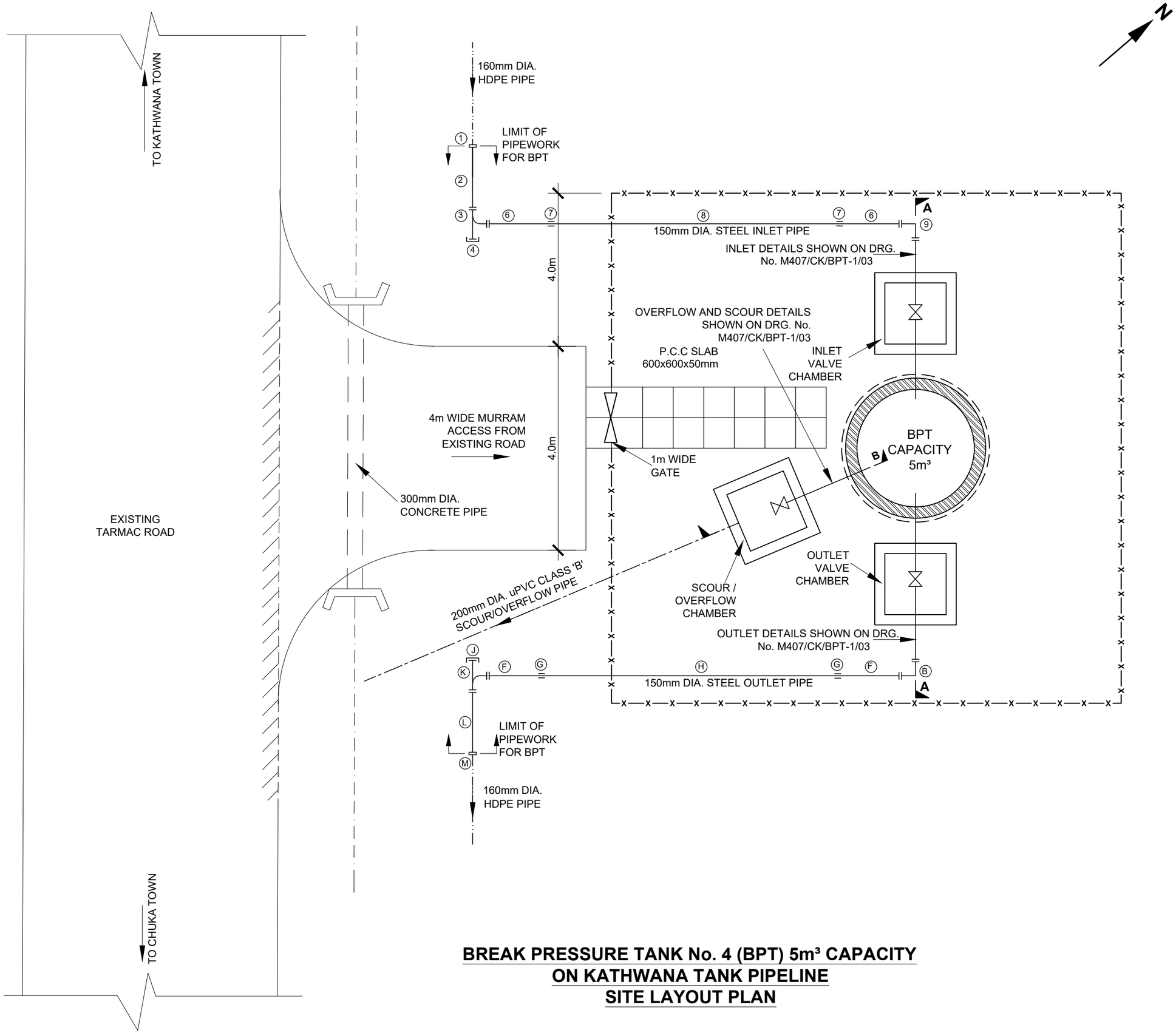

BREAK PRESSURE TANK No. 4 (BPT) 5m³ CAPACITY ON KATHWANA TANK PIPELINE SITE LAYOUT PLAN

NOTES

1. DIMENSIONS IN METERS UNLESS OTHERWISE SPECIFIED
2. ALL PIPE DIAMETERS INDICATED ARE NOMINAL SIZES.
3. THIS DRAWING TO BE READ IN CONJUCTION WITH DRG. NO. M407/CK/BPT-4/02&03
4. FOR BREAK PRESSURE TANK DETAILS SEE DRG NO. M407/CK/BPT-4/02
5. FOR DETAILS OF INLET, OUTLET & SCOUR/OVERFLOW PIPEWORK, SEE DRG. NO. M407/CK/BPT-4/02&03

LEGEND

- CHAINLINK FENCE
- GRAVITY MAIN
- SCOUR / OVERFLOW PIPE
- EARTH DRAIN
- GATE VALVE
- CHAMBER
- CULVERT WITH HEAD WALLS

ISSUED FOR CONSTRUCTION

REVISIONS		SIGN	DATE	APPROVED
	BY			
	CHECGED			
	BY			
	CHECGED			
	BY			
	CHECGED			
	BY			
	CHECGED			

CLIENT:

THE CHIEF EXECUTIVE OFFICER
TANA WATER WORKS DEVELOPMENT AGENCY
P.O BOX 1292 - 10100,
NYERI, KENYA

CONSULTING ENGINEERS:

MANGAT I.B PATEL(MIBP) LIMITED
P.O BOX 48674,00100-GPO,
NAIROBI, KENYA
E-MAIL: mibp.nairobi@mibp.co.ke
TEL: +254-2-2710500

PROJECT TITLE:

KENYA TOWNS SUSTAINABLE WATER SUPPLY AND SANITATION PROGRAM

TENDER No.TWSB/ADB/003/2019-2020

CONSTRUCTION OF CHUKA AND CHOGORIA WATER SUPPLY AND SANITATION PROJECT

LOT 1: CHUKA WATER SUPPLY

DRAWING TITLE:

BREAK PRESSURE TANK ON KATHWANA PIPELINE (CAPACITY 5m³) PLAN, SECTION & R.C. DETAILS

Designed by:	P.W.K	Drawn by:	P.W.K
Checked by:	N.J.N	Approved by:	N.J.N
Scale:	1:75	Date:	FEB 2025

DRG No. M407/CK/BPT-4/01 REV

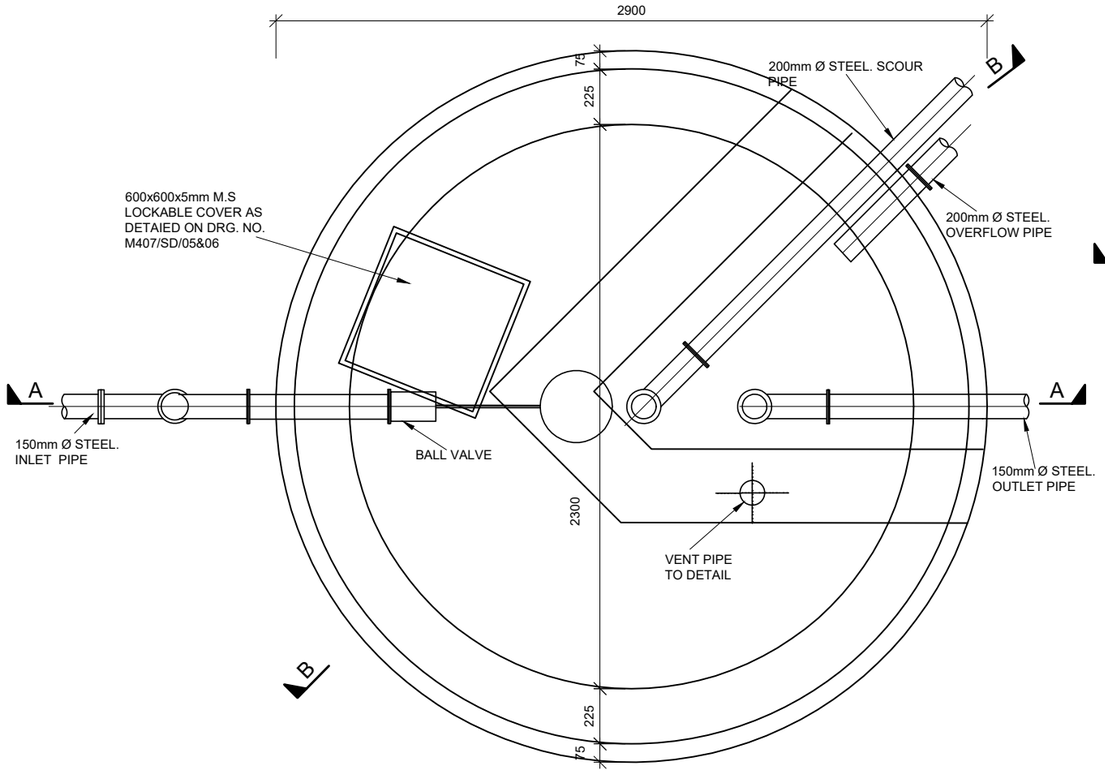

PLAN

SCALE 1 : 25

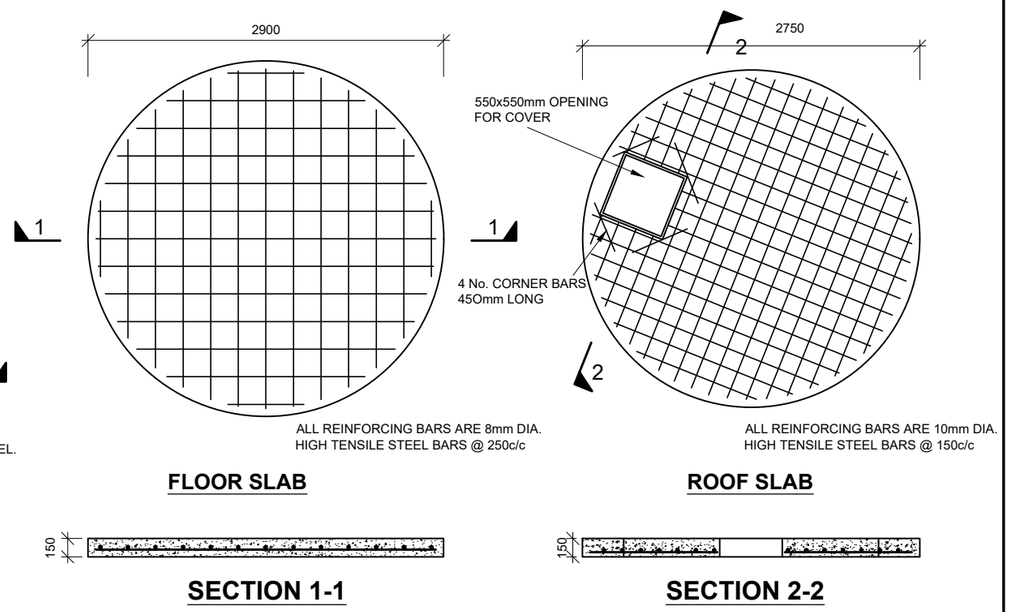

REINFORCEMENT DETAILS

SCALE 1 : 50

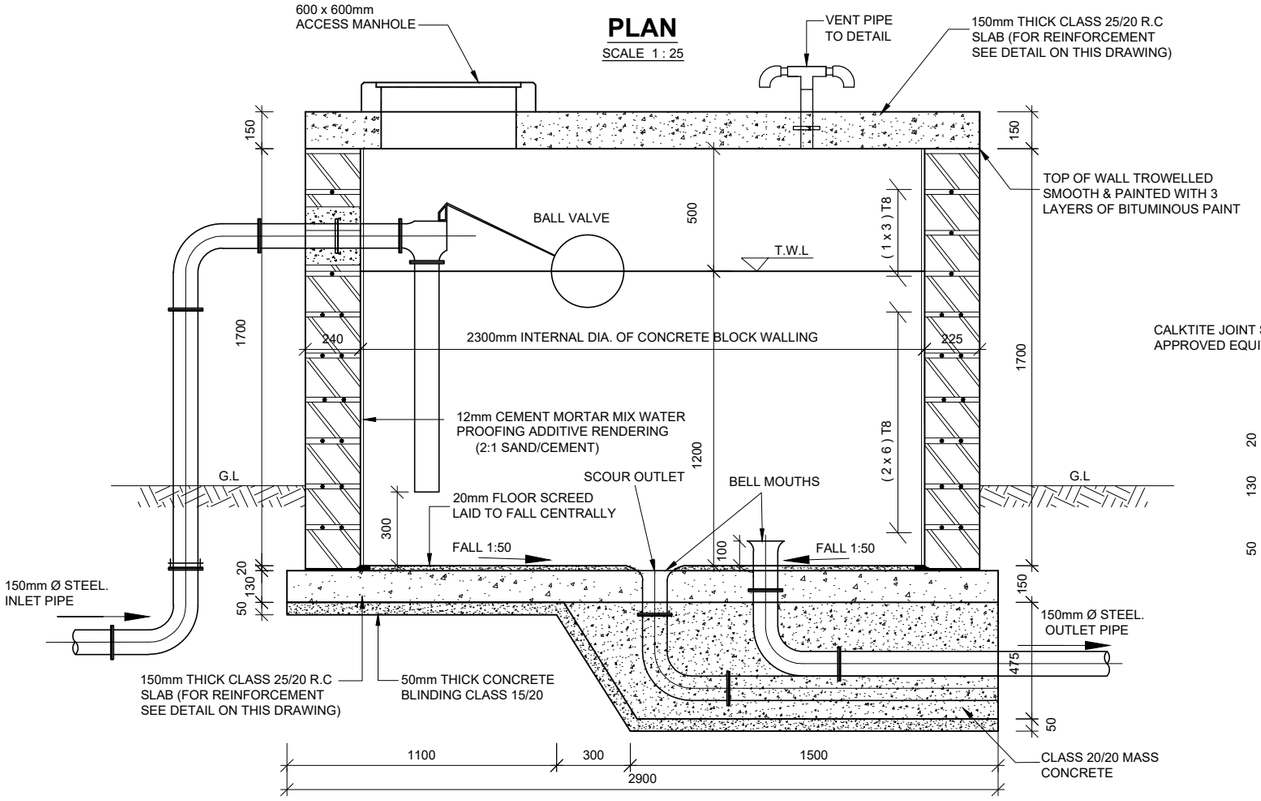

SECTION A-A

SCALE 1 : 25

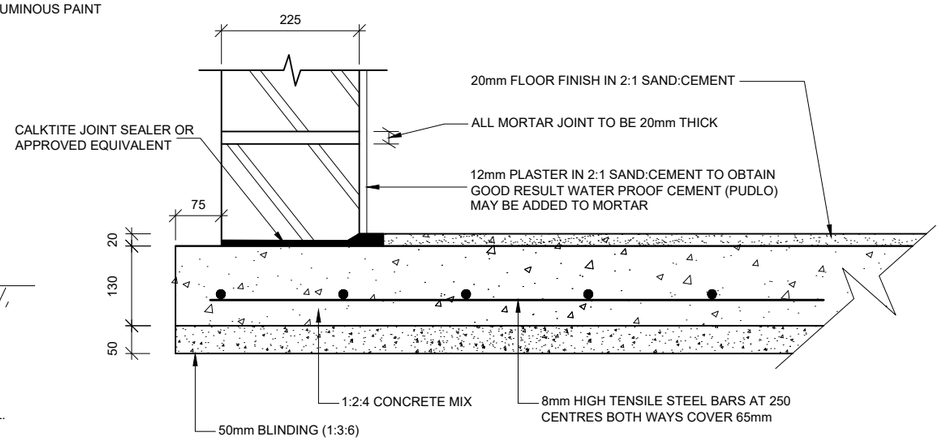

ENLARGED DETAIL AT FOOT OF WALL

SCALE 1 : 10

NOTES

1. FOR DETAILS OF SITE LAYOUT OF THE BREAK PRESSURE TANKS, REFER TO DRG. Nos. M407/CK/BPT-4/01
2. FOR DETAILS OF ALL PIPE CONNECTIONS AND FITTINGS, REFER DRG. No.M407/CK/BPT-4/03
3. ALL DIMENSIONS IN mm UNLESS SPECIFIED.

ABBREVIATIONS

1. T.W.L - TOP WATER LEVEL
2. G.L - GROUND LEVEL
3. R.C - REINFORCED CONCRETE
4. FE. - FERROUS

ISSUED FOR CONSTRUCTION

REVISIONS		SIGN	DATE	APPROVED
	BY			
	CHECKED			
	BY			
	CHECKED			
	BY			
	CHECKED			
	BY			
	CHECKED			

CLIENT:
THE CHIEF EXECUTIVE OFFICER
TANA WATER WORKS DEVELOPMENT AGENCY
P.O BOX 1292 - 10100,
NYERI, KENYA

CONSULTING ENGINEERS:
MANGAT I.B PATEL(MIBP) LIMITED
P.O BOX 48674,00100-GPO,
NAIROBI, KENYA
E-MAIL: mibp.nairobi@mibp.co.ke
TEL: +254-2-2710500

PROJECT TITLE:
KENYA TOWNS SUSTAINABLE WATER SUPPLY AND SANITATION PROGRAM

CONTRACT No.TWSB/ADB/003/2019-2020
CONSTRUCTION OF CHUKA AND CHOGORIA WATER SUPPLY AND SANITATION PROJECT

LOT 1: CHUKA WATER SUPPLY

DRAWING TITLE:
BREAK PRESSURE TANK ON KATHWANA LINE (CAPACITY 5m³) PLAN, SECTION & R.C. DETAILS

Designed by:	P.W.K	Drawn by:	P.W.K
Checked by:	N.J.N	Approved by:	N.J.N
Scale:	1:25	Date:	FEB 2025

DRG No. M407/CK/BPT-4/02 REV

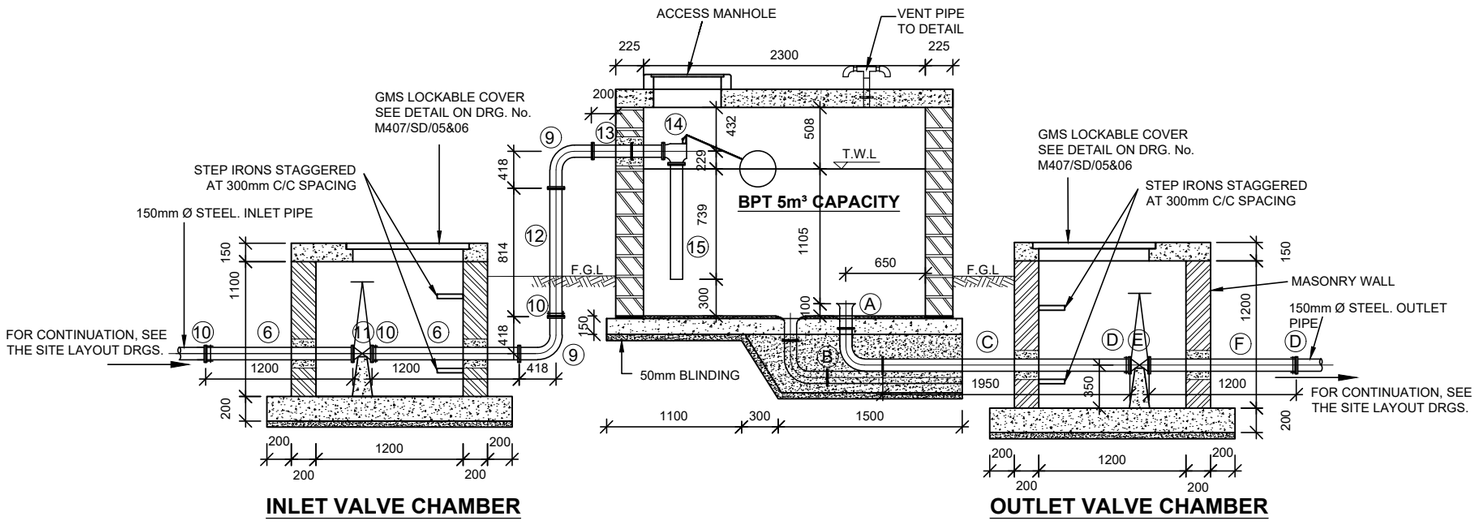

SECTION A-A
INLET & OUTLET PIPEWORK DETAILS

SCALE 1 : 50

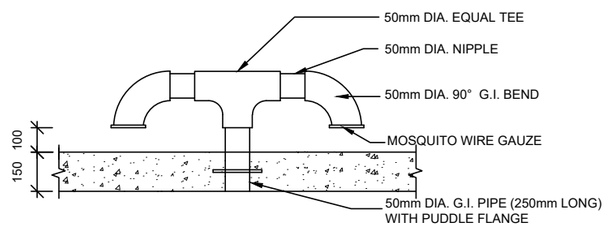

VENT PIPE DETAIL

N.T.S

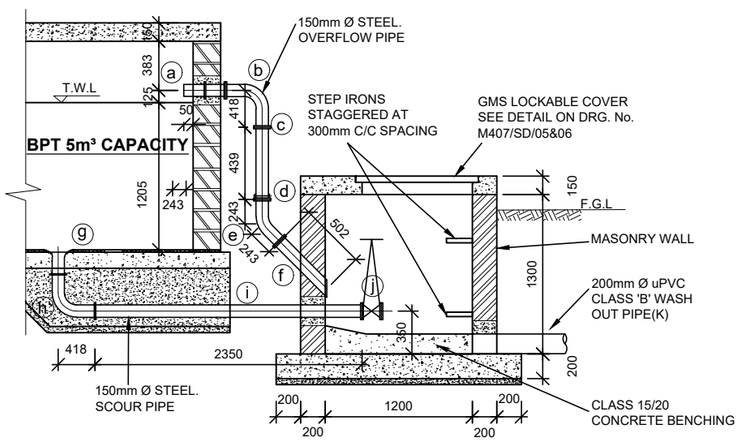

OVERFLOW & WASHOUT CHAMBER

SECTION B-B
OVERFLOW & WASHOUT PIPEWORK DETAILS

SCALE 1 : 50

BPT No. 4

OVERFLOW AND SCOUR PIPEWORK DETAILS
APPROVED LINED STEEL PIPES AND FITTINGS

OVERFLOW PIPE WORK

- (a) 150mm DIA. FLANGED SPIGOT PIPE 425mm LONG WITH A PUDDLE FLANGE AT 162.5mm FROM THE SPIGOT END.....1 Nr.
- (b) 150mm DIA. ALL FLANGED 90° BEND .....1 Nr.
- (c) 150mm DIA. FLANGED SPIGOT PIPE 439mm LONG (CUT TO SUIT ON SITE).....1 Nr.
- (d) 150mm DIA. FLANGE ADAPTOR .....1 Nr.
- (e) 150mm DIA. ALL FLANGED 45° BEND .....1 Nr.
- (f) 150mm DIA. FLANGED SPIGOT PIPE 502mm LONG WITH A SPIGOT END BEVELLED (CUT TO SUIT ON SITE).....1 Nr.

WASHOUT/SCOUR PIPE WORK

- (g) 150mm DIA. FLANGED BELLMOUTH .....1 Nr.
- (h) 150mm DIA. ALL FLANGED 90° BEND .....1 Nr.
- (i) 150mm DIA. DOUBLE FLANGED PIPE 2350mm LONG .....1 Nr.
- (j) 150mm DIA. ALL FLANGED GATE VALVE TO EURO 20 SERIES,TYPE 23 OR APPROVED EQUIVALENT.....1 Nr.
- (k) 200mm DIA. uPVC CLASS 'B' PIPE 10000mm LONG. .....1 Nr.

BPT No. 4

INLET PIPEWORK DETAILS
APPROVED LINED STEEL PIPES AND FITTINGS

- (1) 160mm DIA. STEPPED COUPLING.....1 Nr.
- (2) 150mm DIA. FLANGED SPIGOT PIPE 1250mm LONG .....1 Nr.
- (3) 150 x 150mm DIA. ALL FLANGED RADIAL TEE .....1 Nr.
- (4) 150mm DIA. BLANK FLANGE .....1 Nr.
- (6) 150mm DIA. FLANGED SPIGOT PIPE 1200mm LONG .....4 Nr.
- (7) 150mm DIA. COUPLING .....2 Nr.
- (8) 150mm DIA. PLAIN ENDED PIPE 8m LONG(CUT TO SUIT ON SITE)...1 Nr.
- (9) 150mm DIA. ALL FLANGED 90° BEND .....3 Nr.
- (10) 150mm DIA. FLANGE ADAPTOR .....3 Nr.
- (11) 150mm DIA. ALL FLANGED GATE VALVE .....1 Nr.
- (12) 150mm DIA. FLANGED SPIGOT PIPE 814mm LONG (CUT TO SUIT ON SITE).....1 Nr.
- (13) 150mm DIA. DOUBLE FLANGED PIPE 575mm LONG WITH A PUDDLE FLANGE AT 262mm FROM ONE END.....1 Nr.
- (14) 150mm DIA. ALL FLANGED FLOAT VALVE TO SERIES 1042 BIWATER CATALOGUE OR APPROVED EQUIVALENT.....1 Nr.
- (15) 150mm DIA. FLANGED SPIGOT FERROUS PIPE 739mm LONG.....1 Nr.

BPT No. 4

OUTLET PIPEWORK DETAILS
APPROVED LINED STEEL PIPES AND FITTINGS

- (A) 150mm DIA. FLANGED BELLMOUTH .....1 Nr.
- (B) 150mm DIA. ALL FLANGED 90° BEND .....2 Nr.
- (C) 150mm DIA. FLANGED SPIGOT PIPE 1950mm LONG (CUT TO SUIT ON SITE).....1 Nr.
- (D) 150mm DIA. FLANGE ADAPTOR .....2 Nr.
- (E) 150mm DIA. ALL FLANGED GATE VALVE .....1 Nr.
- (F) 150mm DIA. FLANGED SPIGOT PIPE 1200mm LONG .....3 Nr.
- (G) 150mm DIA. COUPLING .....2 Nr.
- (H) 150mm DIA. PLAIN ENDED PIPE 8m LONG(CUT TO SUIT ON SITE)...1 Nr.
- (J) 150mm DIA. BLANK FLANGE .....1 Nr.
- (K) 150 x 150mm DIA. ALL FLANGED RADIAL TEE .....1 Nr.
- (L) 150mm DIA. FLANGED SPIGOT PIPE 1250mm LONG .....1 Nr.
- (M) 150mm DIA. STEPPED COUPLING .....1 Nr.

NOTES

1. ALL PIPE, FITTINGS AND VALVE DIAMETER ARE NOMINAL DIAMETERS & OF CLASS NP 16
2. OTHER PIPES AND FITTINGS ARE SHOWN ON THE SITE LAYOUT PLANS ON DRG. NO. M407/CK/BPT-4/01
3. ALL DIMENSIONS ARE IN MM UNLESS OTHERWISE STATED
4. PIPE AND FITTINGS ARE MADE BY ASP (K) LTD.
5. VALVES ARE MADE BY ANHUI REDSTAR

ABBREVIATIONS

1. T.W.L - TOP WATER LEVEL
2. F.G.L - FINISHED GROUND LEVEL
3. G.I - GALVANISED IRON
4. R.C - REINFORCED CONCRETE
5. M.S - MILD STEEL
6. BPT - BREAK PRESSURE TANK
7. FE. - FERROUS

ISSUED FOR CONSTRUCTION

	REVISIONS		SIGN	DATE	APPROVED
		BY			
		CHECKED			
		BY			
		CHECKED			
		BY			
		CHECKED			
		BY			
		CHECKED			

CLIENT:
THE CHIEF EXECUTIVE OFFICER
TANA WATER WORKS DEVELOPMENT AGENCY
P.O BOX 1292 - 10100,
NYERI, KENYA

CONSULTING ENGINEERS:
MANGAT I.B PATEL(MIBP) LIMITED
P.O BOX 48674,00100-GPO,
NAIROBI, KENYA
E-MAIL: mibp.nairobi@mibp.co.ke
TEL: +254-2-2710500

PROJECT TITLE:
KENYA TOWNS SUSTAINABLE WATER SUPPLY AND SANITATION PROGRAM

CONTRACT No.TWSB/ADB/003/2019-2020
CONSTRUCTION OF CHUKA AND CHOGORIA WATER SUPPLY AND SANITATION PROJECT

LOT 1: CHUKA WATER SUPPLY

DRAWING TITLE:
BREAK PRESSURE TANK ON KATHWANA LINE (CAPACITY 5m³) PIPEWORK DETAILS

Designed by:	P.W.K	Drawn by:	P.W.K
Checked by:	N.J.N	Approved by:	N.J.N
Scale:	1:50	Date:	FEB 2025

DRG No. M407/CK/BPT-4/03 REV

TYPICAL AIR VALVE CHAMBER

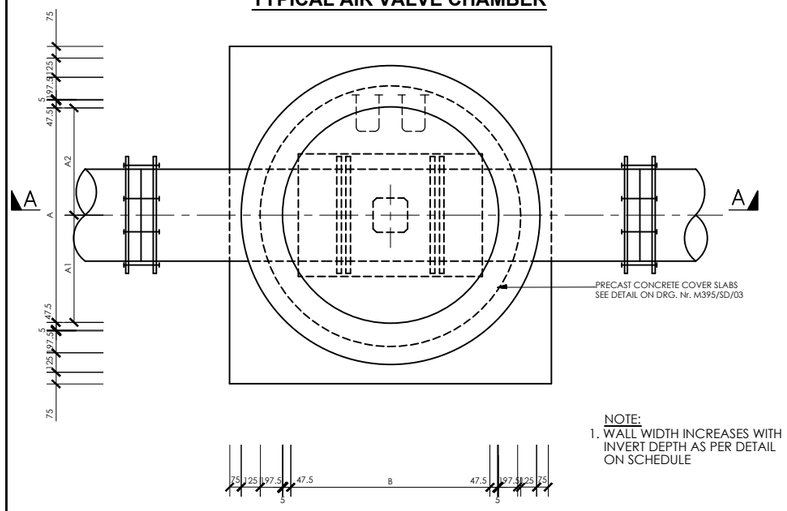

NOTE:
1. WALL WIDTH INCREASES WITH INVERT DEPTH AS PER DETAIL ON SCHEDULE

PLAN OF CHAMBER
SCALE 1:40

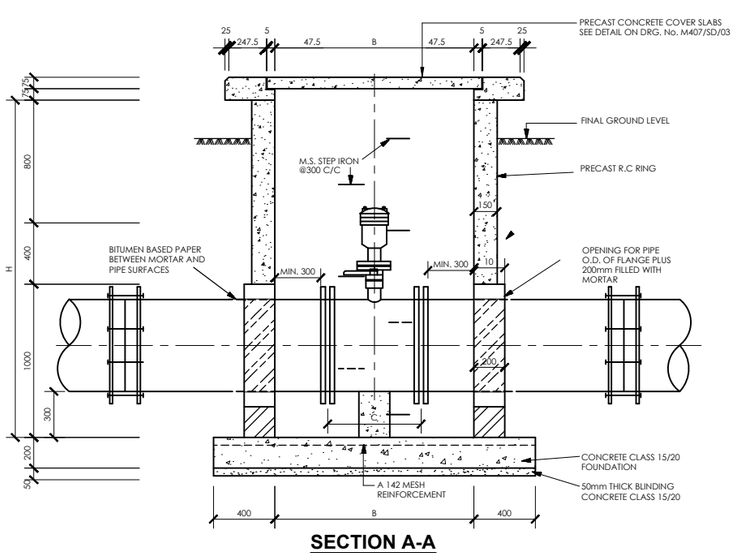

SECTION A-A
SCALE 1:40

TYPICAL VALVE CHAMBER DETAILS AT JUNCTIONS / WASHOUT VALVE (DEPTH > 1.0m)

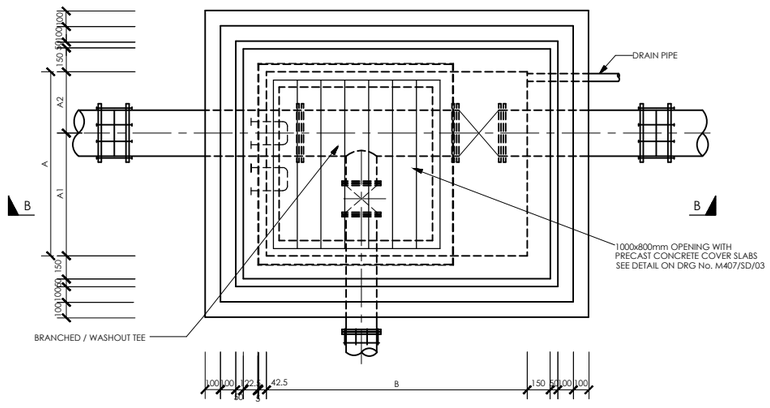

NOTE:
1. WALL WIDTH INCREASES WITH INVERT DEPTH AS PER DETAIL ON SCHEDULE

PLAN OF CHAMBER
SCALE 1:40

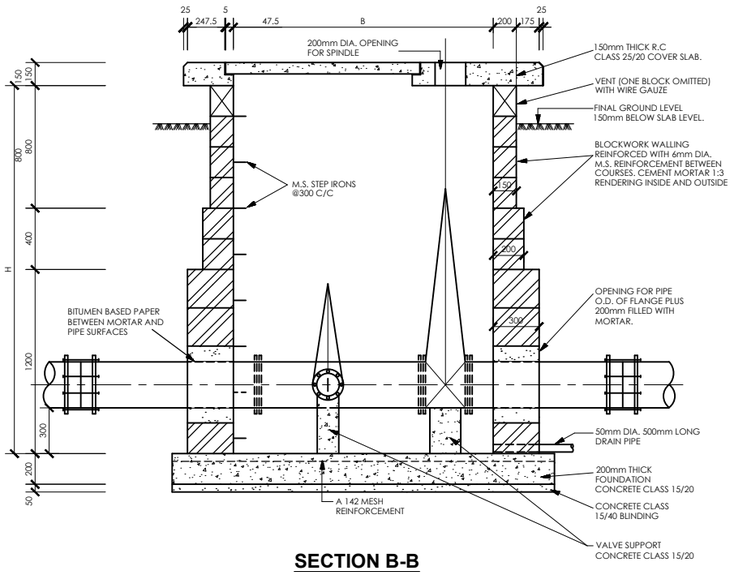

SECTION B-B
SCALE 1:40

TYPICAL VALVE BOX DETAIL FOR WASHOUT / VALVE (DEPTH ≤ 1.0m)

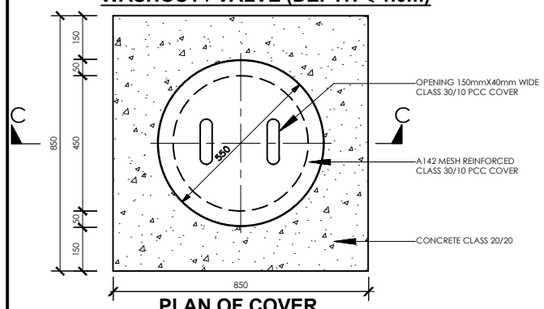

PLAN OF COVER
SCALE 1:20

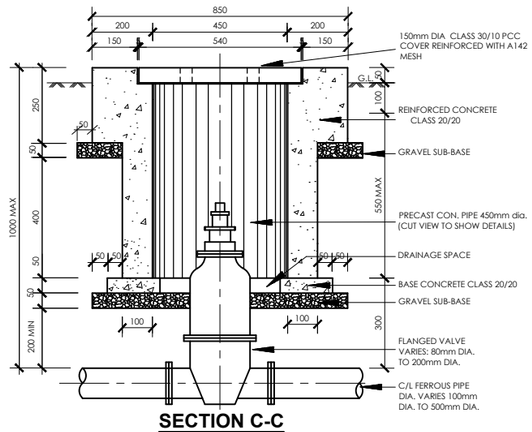

SECTION C-C
SCALE 1:20

TYPICAL VALVE BOX DETAIL FOR FIRE HYDRANT

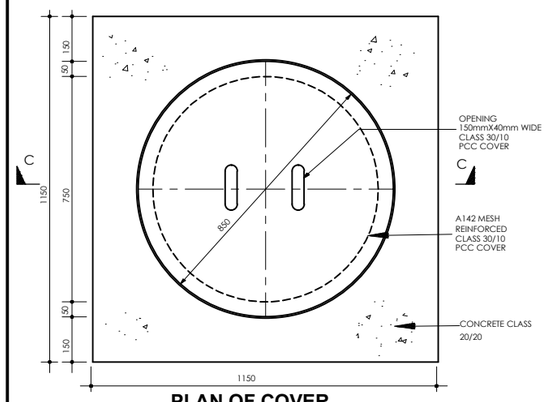

PLAN OF COVER
SCALE 1:20

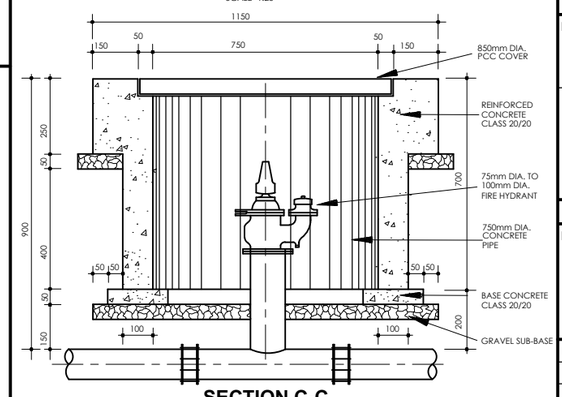

SECTION C-C
SCALE 1:20

CONSTRUCTION DETAILS FOR VALVE CHAMBERS

MAINS DIAMETER (mm)	PLAN SIZE OF CHAMBER (INTERNAL DIMENSIONS) A(mm) x B(mm)
150	1200 x 1200
200	1200 x 1200
250	1200 x 1200
300	1200 x 1200
350	1200 x 1200
450	1200 x 1200

CHAMBER SIZE SCHEDULE FOR VARIOUS PIPE SIZES

INVERT DEPTHS (mm)	HEIGHT OF WALL (mm)	WALL WIDTH (mm)
0 - 800	800	150 - MASONRY WALL
800 - 1200	400	200 - MASONRY WALL
1200 - 2400	1200	300 - MASONRY WALL
2400 - 3000	600	350 - MASONRY WALL
DEPTH MORE THAN 3000	-	300mm REINFORCED CONCRETE (CLASS 25/20) WALL

CHAMBER DEPTHS & WALL THICKNESS SCHDULE

NOTES

1. DIMENSIONS ARE SHOWN IN MILIMETRES UNLESS OTHERWISE STATED

ABBREVIATIONS

P.C.C. - PRECAST CONCRETE
mm - MILLIMETRES
O.D. - OUTSIDE DIAMETER
M.S. - MILD STEEL
DIA. - DIAMETER
NO. - NUMBER
R.C. - REINFORCED CONCRETE
c/c - CENTRE TO CENTRE

ISSUED FOR CONSTRUCTION

REVISIONS		SIGN	DATE	APPROVED
	BY			
	CHECKED			
	BY			
	CHECKED			
	BY			
	CHECKED			
	BY			
	CHECKED			

CLIENT: THE CHIEF EXECUTIVE OFFICER
TANA WATER WORKS DEVELOPMENT AGENCY
P.O BOX 1292 - 10100,
NYERI, KENYA

CONSULTING ENGINEERS:
MANGAT I.B PATEL(MIBP) LIMITED
P.O BOX 48674,00100-GPO,
NAIROBI, KENYA
E-MAIL: mibp.nairobi@mibp.co.ke
TEL: +254-2-2710500

PROJECT TITLE:
KENYA TOWNS SUSTAINABLE WATER SUPPLY AND SANITATION PROGRAM

TENDER No.TWSB/ADB/003/2019-2020
CONSTRUCTION OF CHUKA AND CHOGORIA WATER SUPPLY AND SANITATION PROJECT

LOT 1: CHUKA WATER SUPPLY

DRAWING TITLE:
STANDARD DRAWINGS

DETAILS OF VALVE CHAMBERS

Designed by:	K.M.K	Drawn by:	P.W.K
Checked by:	N.J.N	Approved by:	R.S.R
Scale:	AS SHOWN	Date:	FEB 2025

DRG No. M407/SD/01 REV

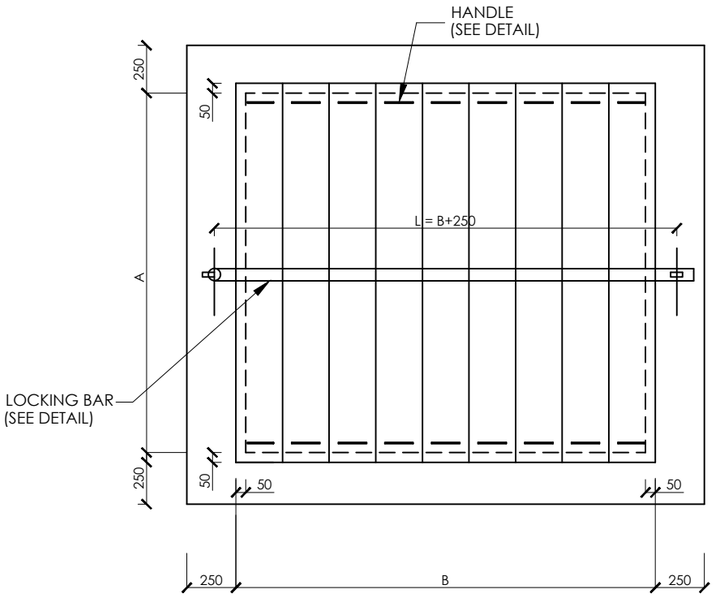

COVER FOR AIR VALVE CHAMBERS

SCALE A1 - 1:10
A3 - 1:20

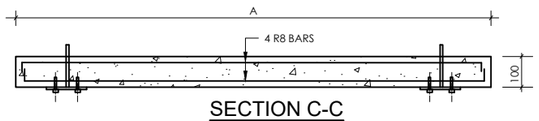

SECTION C-C

SCALE A1 - 1:10
A3 - 1:20

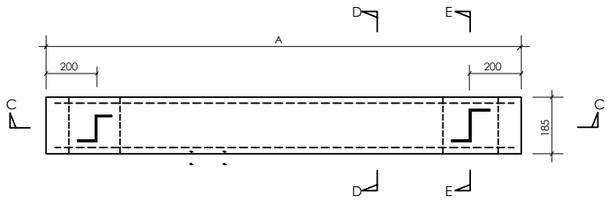

PLAN

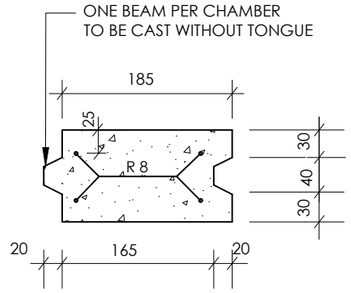

SECTION D-D

NTS

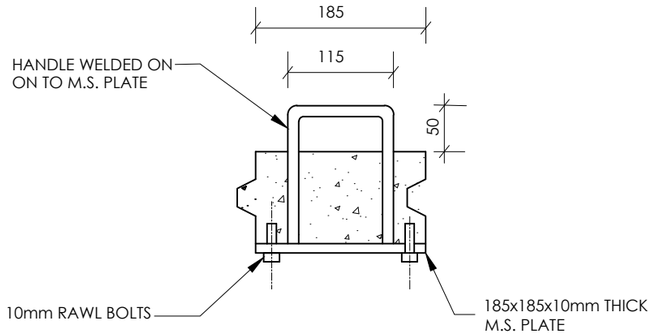

SECTION E-E

NTS

DETAIL OF PRECAST CONCRETE COVER SLAB

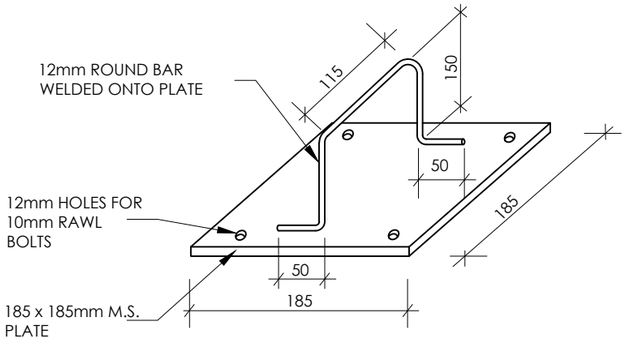

DETAIL OF HANDLE

NTS

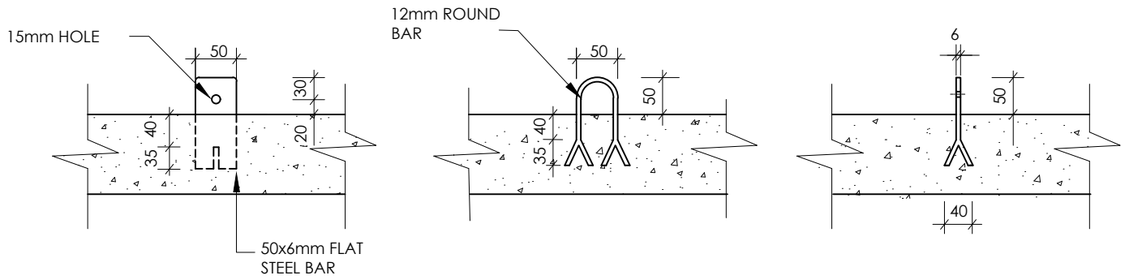

SECTIONS

COVER SIZE SCHDULE

CHAMBER INTERNAL DIMENSIONS (mm)	SIZE OF COVER A (mm) x B(mm)
1200 X 1200	1300 X 1300
1200 X 1200	1300 X 1300
1400 X 1200	1500 X 1500
1500 X 1200	1600 X 1300
1500 X 1200	1600 X 1300
1800 X 1200	1900 X 1300
1800 X 1200	1900 X 1300
1400 X 1400	1500 X 1500
1400 X 1200	1500 X 1300

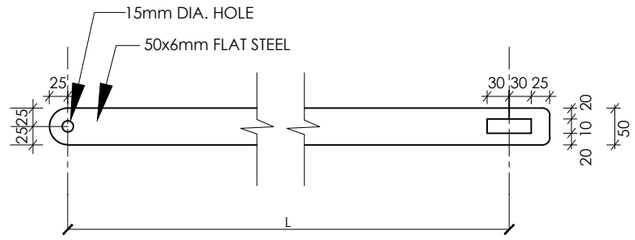

PLAN

DETAILS OF LOCKING BAR

NTS

NOTES

1. ALL DIMENSIONS ARE IN mm. UNLESS OTHERWISE STATED.

ABBREVIATIONS

M.S. = MILD STEEL.

mm - MILIMETER

Dia. - DIAMETER

NTS - NOT TO SCALE

Nr. - NUMBER

REVISIONS		SIGN	DATE	APPROVED
	BY			
	CHECKED			
	BY			
	CHECKED			
	BY			
	CHECKED			
	BY			
	CHECKED			

CLIENT:

THE CHIEF EXECUTIVE OFFICER
TANA WATER WORKS DEVELOPMENT AGENCY
P.O BOX 1292 - 10100,
NYERI, KENYA

CONSULTING ENGINEERS:

MANGAT I.B PATEL(MIBP) LIMITED
P.O BOX 48674,00100-GPO,
NAIROBI, KENYA
E-MAIL: mibp.nairobi@mibp.co.ke
TEL: +254-2-2710500

PROJECT TITLE:

KENYA TOWNS SUSTAINABLE WATER SUPPLY AND SANITATION PROGRAM

TENDER No.TWSB/ADB/003/2019-2020

CONSTRUCTION OF CHUKA AND CHOGORIA WATER SUPPLY AND SANITATION PROJECT

LOT 1: CHUKA WATER SUPPLY

DRAWING TITLE:

STANDARD DRAWINGS

DETAILS OF PRECAST CONCRETE COVERS FOR VALVE CHAMBERS

Designed by:	K.M.K	Drawn by:	P.W.K
Checked by:	N.J.N	Approved by:	R.S.R
Scale:	AS SHOWN	Date:	FEB 2025

DRG No. M407/SD/02 REV

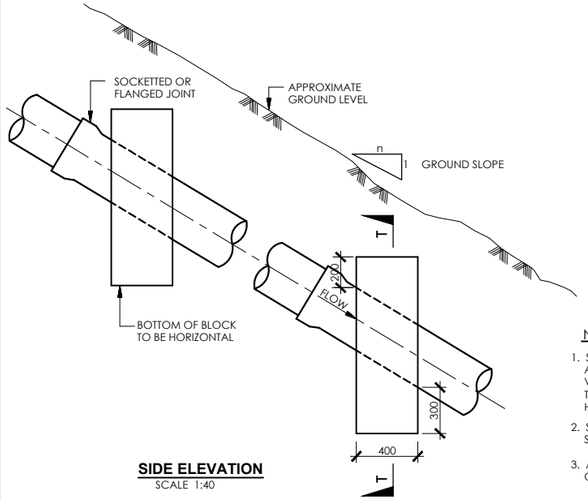

SIDE ELEVATION
SCALE 1:40

RANGE OF GROUND SLOPE (1:n)	MAXIMUM DISTANCE BETWEEN ANCHOR BLOCKS (m)
1:8 - 1:6	36
1:6 - 1:5	24
1:5 - 1:4	18
1:4 - 1:2	12
>1:2	EVERY PIPE LENGTH TO BE ANCHORED (BASED ON PIPE LENGTH OF 6m)

NOTES

1. SAME ARRANGEMENT CAN BE USED AS SUPPORTS FOR PIPES LAID IN VERY SOFT GROUND BUT BLOCKS TO BE CAST ON SOUND ROCK OR HARD STRATUM
2. SOCKETTED JOINT TO BE LAID WITH SOCKET FACING UPSTREAM OF GRADE
3. ANCHOR BLOCK TO BE CONSTRUCTED ON LOWER SIDE OF JOINT

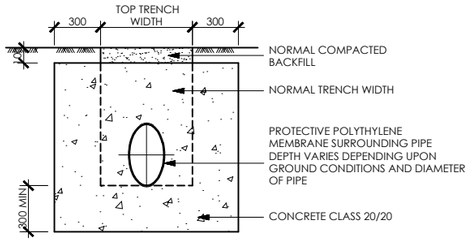

SECTION T-T
SCALE 1:40

ANCHOR BLOCK FOR STEEP GRADIENTS (SLOPES>1:6)

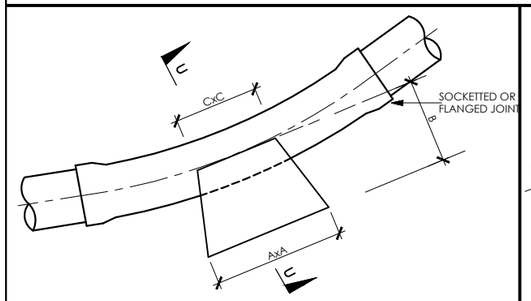

ELEVATION
SCALE 1:40

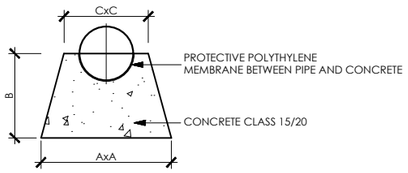

SECTION U-U
SCALE 1:40

THRUST BLOCKS ON VERTICAL BENDS (DOWN-THRUST)

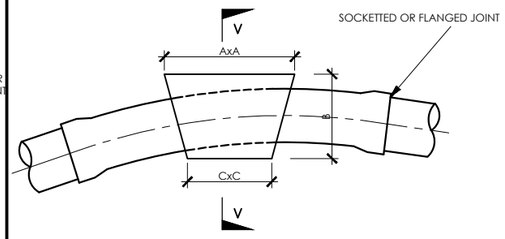

ELEVATION
SCALE 1:40

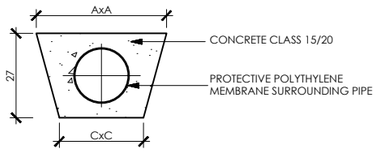

SECTION V-V
SCALE 1:40

THRUST BLOCKS ON VERTICAL BENDS (UP-THRUST)

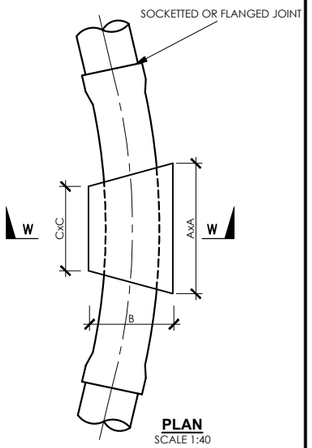

PLAN
SCALE 1:40

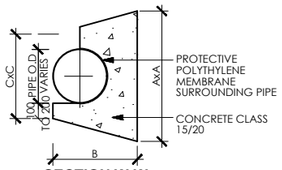

SECTION W-W
SCALE 1:40

THRUST BLOCKS ON HORIZONTAL BENDS AND TEES

(ND) NOMINAL DIAMETER (mm)	THRUST BLOCK DIMENSIONS AxBxC(m), CONCRETE VOLUME (m³)						
	11 1/4° BENDS	22 1/2° BENDS	30°BENDS	45°BENDS	CAPPED ENDS & 90°TEES	90°BENDS	REDUCERS ND=√ND1²-ND2²
80	0.2x0.2x0.2 (0.01m³)	0.25x0.2x0.2 (0.01m³)	0.25x0.2x0.2 (0.01m³)	0.3x0.2x0.2 (0.02m³)	0.35x0.2x0.2 (0.02m³)	0.4x0.2x0.2 (0.02m³)	0.35x0.2x0.2 (0.02m³)
100	0.2x0.2x0.2 (0.01m³)	0.3x0.2x0.2 (0.02m³)	0.35x0.2x0.2 (0.02m³)	0.4x0.2x0.2 (0.02m³)	0.45x0.25x0.25 (0.04m³)	0.55x0.3x0.3 (0.06m³)	0.45x0.25x0.25 (0.04m³)
150	0.3x0.25x0.25 (0.02m³)	0.4x0.25x0.25 (0.03m³)	0.5x0.3x0.3 (0.05m³)	0.55x0.3x0.3 (0.06m³)	0.65x0.35x0.35 (0.10m³)	0.8x0.4x0.35 (0.16m³)	0.65x0.35x0.35 (0.10m³)
200	0.4x0.3x0.3 (0.04m³)	0.55x0.35x0.35 (0.08m³)	0.6x0.4x0.4 (0.11m³)	0.75x0.4x0.4 (0.15m³)	0.85x0.45x0.4 (0.20m³)	1.0x0.5x0.4 (0.29m³)	0.85x0.45x0.4 (0.20m³)
250	0.5x0.35x0.35 (0.07m³)	0.65x0.4x0.4 (0.12m³)	0.75x0.45x0.45 (0.18m³)	0.9x0.45x0.45 (0.23m³)	1.1x0.55x0.45 (0.39m³)	1.2x0.6x0.45 (0.50m³)	1.1x0.55x0.45 (0.39m³)
300	0.55x0.45x0.45 (0.12m³)	0.8x0.5x0.5 (0.23m³)	0.9x0.5x0.5 (0.27m³)	1.1x0.6x0.5 (0.44m³)	1.25x0.65x0.5 (0.59m³)	1.5x0.75x0.5 (0.94m³)	1.25x0.65x0.5 (0.59m³)
350	0.6x0.5x0.5 (0.16m³)	0.85x0.55x0.55 (0.29m³)	1.0x0.55x0.55 (0.36m³)	1.2x0.6x0.55 (0.53m³)	1.4x0.7x0.55 (0.80m³)	1.6x0.8x0.55 (1.20m³)	1.4x0.7x0.55 (0.80m³)
400	0.7x0.6x0.6 (0.26m³)	0.95x0.6x0.6 (0.38m³)	1.1x0.6x0.6 (0.47m³)	1.3x0.65x0.6 (0.67m³)	1.6x0.8x0.6 (1.20m³)	1.8x0.9x0.6 (1.60m³)	1.6x0.8x0.6 (1.20m³)
450	0.8x0.65x0.65 (0.35m³)	1.1x0.65x0.65 (0.53m³)	1.3x0.65x0.65 (0.69m³)	1.5x0.75x0.65 (1.0m³)	1.8x0.9x0.65 (1.7m³)	2.0x1.0x0.65 (2.2m³)	1.8x0.9x0.65 (1.7m³)
500	0.9x0.7x0.7 (0.46m³)	1.2x0.7x0.7 (0.68m³)	1.4x0.7x0.7 (0.86m³)	1.7x0.85x0.7 (1.5m³)	2.0x1.0x0.7 (2.3m³)	2.3x1.2x0.7 (3.5m³)	2.0x1.0x0.7 (2.3m³)
600	1.1x0.8x0.8 (0.74m³)	1.5x0.8x0.8 (1.2m³)	1.7x0.9x0.8 (1.6m³)	2.0x1.0x0.8 (2.3m³)	2.3x1.2x0.8 (3.6m³)	2.7x1.4x0.8 (5.6m³)	2.3x1.2x0.8 (3.6m³)

NOTE:- THE ABOVE VALUES APPLY FOR SOCKETTED uPVC AND FLANGED OR COUPLED LINED STEEL PIPES SUBJECT TO A WORKING PRESSURE HEAD OF 12 BAR

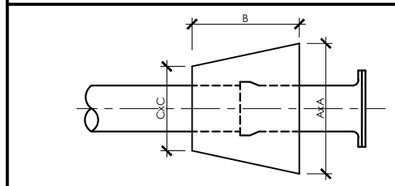

THRUST BLOCK AT CAPPED ENDS
SCALE 1:40

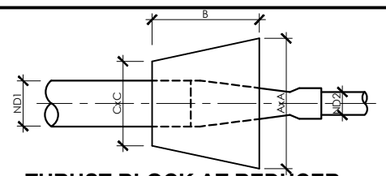

THRUST BLOCK AT REDUCER
SCALE 1:40

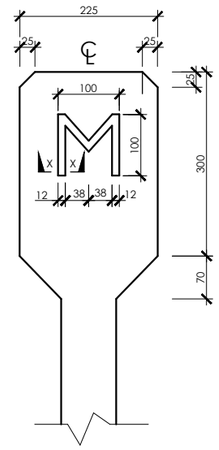

BULK METER POST
SCALE 1:10

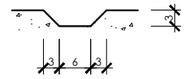

SECTION X-X
N.T.S.

NOTE:-
ALL DETAILS TO BE SAME AS GATE VALVE BUT THE SIGN TO BE CHANGED AS INDICATED

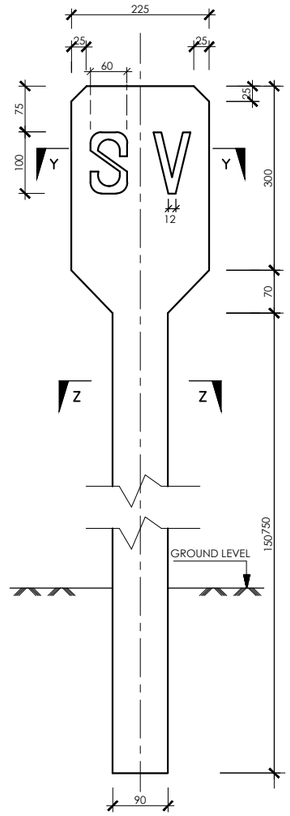

GATE VALVE INDICATOR POST
SCALE 1:10

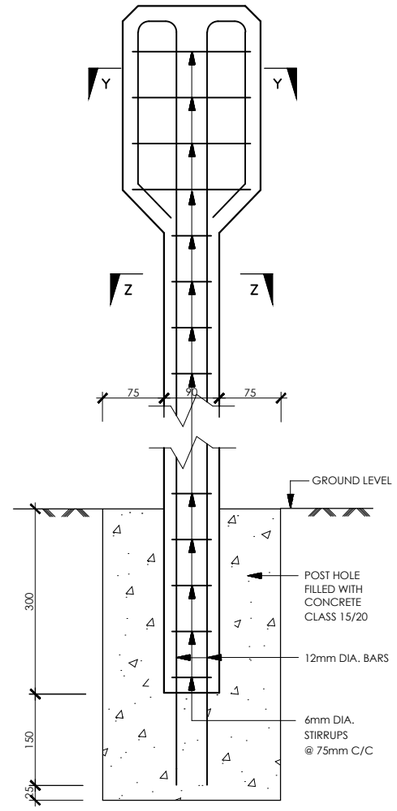

INDICATOR POST REINFORCEMENT DETAILS
SCALE 1:10

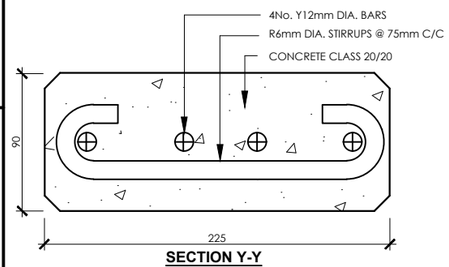

SECTION Y-Y
SCALE 1:4

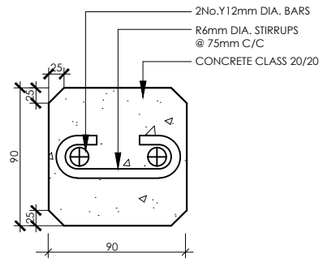

SECTION Z-Z
SCALE 1:4

INDICATOR POST DETAILS

NOTES

1. ALL DIMENSIONS ARE IN mm UNLESS OTHERWISE STATED
2. DETAILS FOR ALL INDICATOR POSTS AS FOR SECTION VALVE BUT LETTERING AS FOLLOWS:

FOR	USE
SECTION VALVE	SV
AIR VALVE	AV
WASHOUT	WO
WATER MAIN	WM
BULK METER	M
'Y'- JUNCTION	Y

3. ALL INDICATOR POSTS PAINTED WITH 2 COATS BLUE OIL BASED PAINT AND WHITE LETTERING

ABBREVIATIONS

mm - MILLIMETRES
OD - OUTSIDE DIAMETER
ND - NOMINAL DIAMETR
Dia - DIAMETER
c/c - CENTRE TO CENTRE
No. - NUMBER
uPVC - UNPLASTICISED POLYVINYL CHLORIDE
m - METRE
℄ - CENTRE LINE
SV - SECTION VALVE
AV - AIR VALVE
WO - WASH OUT
WM - WATER MAIN
M - BULK METER
m^3 - CUBIC METER

ISSUED FOR CONSTRUCTION

	REVISIONS		SIGN	DATE	APPROVED
		BY			
		CHECKED			
		BY			
		CHECKED			
		BY			
		CHECKED			
		BY			
		CHECKED			

CLIENT:
THE CHIEF EXECUTIVE OFFICER
TANA WATER WORKS DEVELOPMENT AGENCY
P.O BOX 1292 - 10100,
NYERI, KENYA

CONSULTING ENGINEERS:
MANGAT I.B PATEL(MIBP) LIMITED
P.O BOX 48674,00100-GPO,
NAIROBI, KENYA
E-MAIL: mibp.nairobi@mibp.co.ke
TEL: +254-2-2710500

PROJECT TITLE:
KENYA TOWNS SUSTAINABLE WATER SUPPLY AND SANITATION PROGRAM

TENDER No.TWSB/ADB/003/2019-2020
CONSTRUCTION OF CHUKA AND CHOGORIA WATER SUPPLY AND SANITATION PROJECT

LOT 1: CHUKA WATER SUPPLY

DRAWING TITLE:
STANDARD DRAWINGS

THRUST BLOCKS, ANCHOR BLOCKS AND INDICATOR POST DETAILS

Designed by:	K.M.K	Drawn by:	P.W.K
Checked by:	N.J.N	Approved by:	R.S.R
Scale:	As Shown	Date:	FEB 2025

DRG No. M407/SD/03 REV

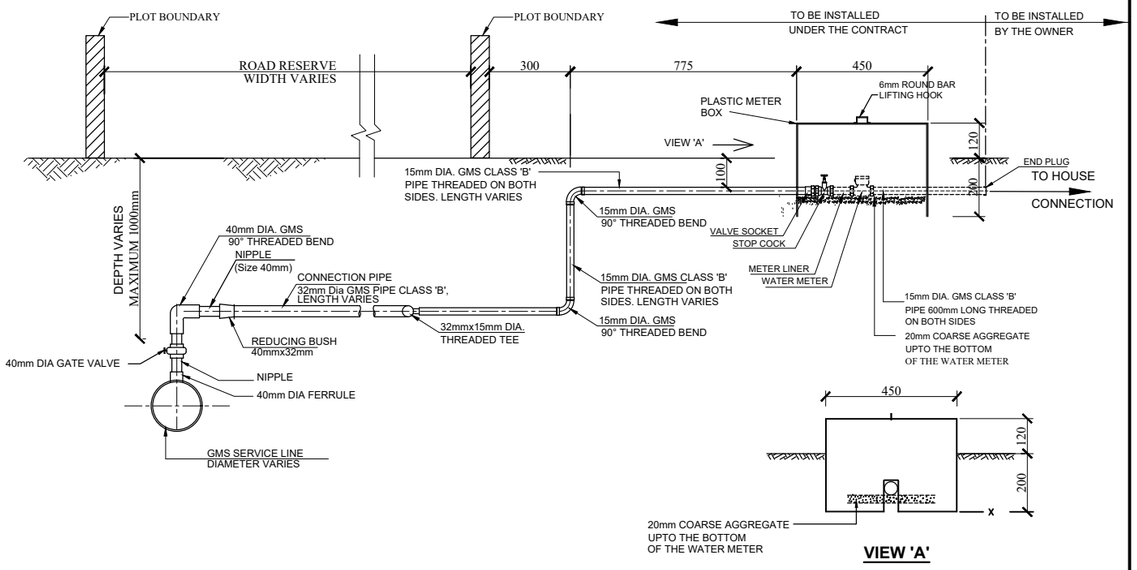

SECTION A-A

NTS

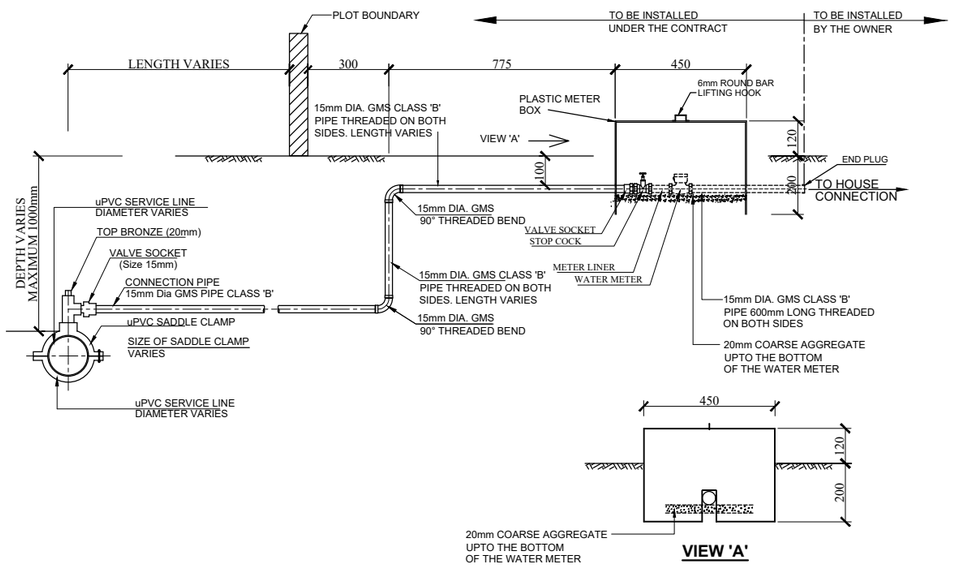

SECTION B-B

NTS

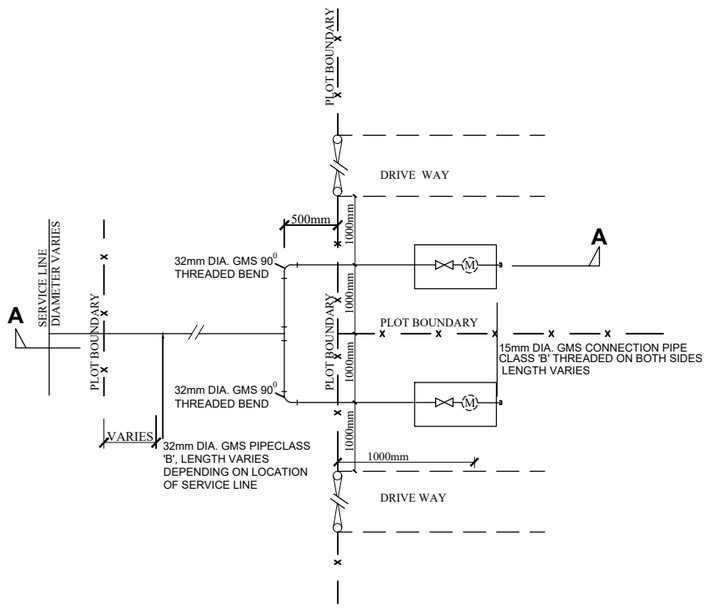

PLAN

TYPICAL CONSUMER CONNECTION ACROSS CARRIAGE WAY FOR TWO HOUSEHOLDS ON A GMS SERVICE LINE

NTS

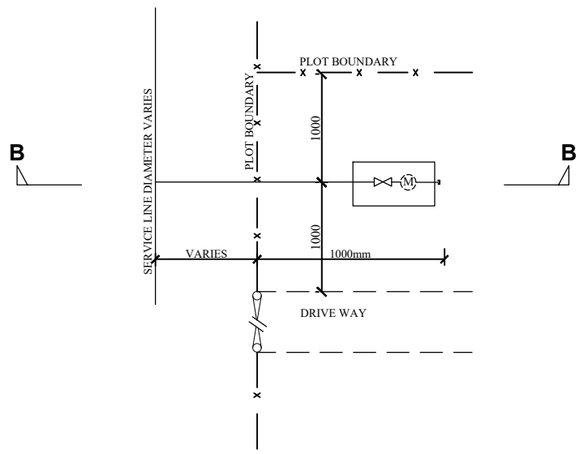

PLAN

TYPICAL CONSUMER CONNECTION FOR ONE HOUSEHOLD ON A uPVC SERVICE LINE

NTS

	REVISIONS		SIGN	DATE	APPROVED
		BY			
		CHECKED			
		BY			
		CHECKED			
		BY			
		CHECKED			
		BY			
		CHECKED			

CLIENT:
THE CHIEF EXECUTIVE OFFICER
TANA WATER WORKS DEVELOPMENT AGENCY
P.O BOX 1292 - 10100,
NYERI, KENYA

CONSULTING ENGINEERS:
MANGAT I.B PATEL(MIBP) LIMITED
P.O BOX 48674,00100-GPO,
NAIROBI, KENYA
E-MAIL: mibp.nairobi@mibp.co.ke
TEL: +254-2-2710500

PROJECT TITLE:
KENYA TOWNS SUSTAINABLE WATER SUPPLY AND SANITATION PROGRAM

TENDER No.TWSB/ADB/003/2019-2020
CONSTRUCTION OF CHUKA AND CHOGORIA WATER SUPPLY AND SANITATION PROJECT

LOT 1: CHUKA WATER SUPPLY

DRAWING TITLE:
STANDARD DRAWINGS
TYPICAL DETAILS OF CONSUMER WATER METER INSTALLATION ON A SERVICE LINE

Designed by:	K.M.K	Drawn by:	P.W.K
Checked by:	N.J.N	Approved by:	R.S.R
Scale:	AS SHOWN	Date:	FEB 2025

DRG No. M407/SD/04 REV